Driven by Service. Defined by Quality.

System Scaffold Catalog

FALL 2025

Table of Contents

07 **01: Introduction**

08 **02: Cup Locks**

Tube Specifications	9
Verticals	10
Horizontals	11
Trusses	12
Clamp Braces	13
Face Braces	14
Board Bracket	15
Caster Adapter	16
Deck Adapter	17
California Guardrail	18
Guardrail Post	19
Support Spigot Clamp	20
Aluminum Stair Stringers	21
Stair Treads	22

23 **03: Ring Locks**

Tube Specifications	24
Verticals	25
Ledgers	26-27
Double Ledgers	28
Lattice Girder	29
Board Bracket	30
Starter Collar	31
Vertical Diagonal	32-33
Guardrail Posts	34
Suspended Connector	35
Support Spigot Clamps	36
Stair Stringers And Steps	37-38
Ring Lock Caster Adapter	39

40 **04: Accessories**

System Jack	41
Universal System Spigot	42
Pins	43
Gates	44
Enclosure System Panel	45-46
Gate Adapters	47
Adjustable Toe Board	48
Universal Toe Board	49
Davit Arms	50
Baskets	51
Casters	52
Plate Casters	53
U-Jack	54
Scaffold Tags	55-56

57 **05: Tube & Clamps**

Twist Lock Tube	58
Open End Aluminum Tube	59
I-Bolt Clamps	60
Wide Body Clamps	61
Bean Clamp	62
T-Bolt Clamp	63
Transom Clap	64
Ring System Accessory Clamps	65
Tube Coupler	66

67 **06: Ladders**

17″ Wide Ladder & Bracket	68
17″ Wide Non-Slip Ladder & Bracket	69
Heavy Duty Steel Ladder & Bracket	70
Ladder-Ring Type	71
SAU Channel Style Ladder	72
Cage Rings	73

Table of Contents

74	**07: Boiler System**	
	Throat Header	75
	Frames & Frame Starter	76
	Base Beam	77
	Saddle Brace	78
	Vee Chair	79
80	**08: Walkboard**	
	9″ Steel Plank Raised Hook	81-82
	9″ Low Profile Steel Plank	83-84
	9-1/2″ Low Profile Steel Plank	85-86
	12-1/2″ Steel Plank	87-88
	7-9/16″ Filler Steel Plank	89-90
	9.5″ All Aluminum Walkboard	91
	19″ Aluminum Plank	92
	19″ Aluminum Plywood Board	93
	Catwalk Grating	94
	Stage Boards	95-96
	28″ Hatch Plank with Aluminum Ladder	97
	Wood Plank	98

01

Information

For decades, DSS has accommodated the special needs of the construction and petrochemical industries. Our commitment to industry-leading quality assurance, extensive employee training and factory certification are unmatched and our proprietary manufacturing and logistics programs ensure that you receive delivery of the safest most reliable scaffolding products wherever in the world you need them on time, every time. We are here to help you retain your competitive edge.

Quality Steel Means Quality Scaffolding

At DSS we are committed to quality in every step of the scaffold manufacturing process. All the steel we use comes with mill certifications, but we don't stop there. We use an independent lab to verify that all steel arriving in our factories meets or exceeds the appropriate BS EN, ASTM/ANSI specifications.

Our Commitment to Safety

We provide extensive classroom and on the job training for all members of our factory team. Our welding procedures were written by an independent professional engineer, and were qualified by testing at independent labs. We constantly qualify all of our welders to the AWS D1.1 standard.

Reliability

All of the products produced by DSS carry a warranty, and we also have full product liability insurance issued by US carriers. We know that your safety depends on our scaffolding, so we go above and beyond in our quality assurance programs to ensure that the scaffolding that you receive is the safest and most reliable available anywhere in the world. Our Ring Lock Scaffold System holds the Australia Registration, DITUC Certification in Chile and the Bureau Veritas Certification. Our Speed Ring Scaffold Systems holds the Bureau Veritas Certification. We are proud to have earned ISO9001:2008 certification for all of our manufacturing facilities. Most of our factories hold DIN BS EN1090 parts 1 & 2 (EXC 3) and EN ISO 3834 part 2.

Compatibility

We verified, though independent professional engineers, that all of our scaffolding products and accessories are compatible with other major US and European Manufacturers.

Value

Our diversified manufacturing base provides us with sufficient manufacturing capacity to meet your requirements. Plus it creates a distinct competitive advantage. We implement our industry leading quality assurance and control programs in all of our oversees factories, and combine those resources with the technical knowledge and experience of our US based technical and engineering services operations. This allows DSS to offer you a distinct cost advantage and creates significant value for our customers.

Quality by Design

At DSS, we take a common sense approach to good business. We start with quality people, manufacture quality products and work hard to establish and maintain quality relationships with our customers. We look forward to the privilege of working with you and the opportunity to demonstrate our commitment to quality manufacturing, business excellence and above all customer satisfaction.

02

Cup Lock

CL1

Tube Specifications

Product Code	Diameter		Thickness		Min. Tensile		Min. Yield	
	IN	MM	IN	MM	MPA	KSI	MPA	KSI
CLV	1.9	48.3	0.130	3.25	517	75,000	414	60,000
CLH	1.9	48.3	0.130	3.25	517	75,000	414	60,000
CLFB	1.9	48.3	0.098	2.50	483	70,000	345	50,000
CLCB	1.9	48.3	0.098	2.50	483	70,000	345	50,000

NOTE: Minimum Elongation at 2in/50.8mm is 20%

CL2

Verticals

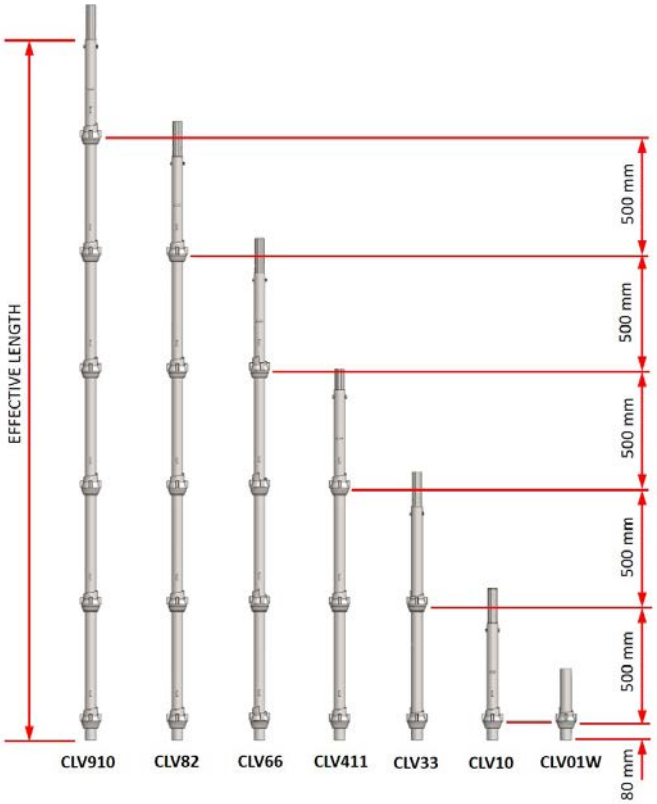

Product Code	Description	Effective Length		Weight	
		IN	MM	LB	KG
CLV01W	1 Cup Vertical without Spigot	12.00	4.10	4.1	1.9
CLV10	1 Cup Vertical	19.69	0.50	9.6	3.5
CLV33	2 Cup Vertical	39.37	1.00	13.6	6.2
CLV411	3 Cup Vertical	59.06	1.50	19.1	8.7
CLV66	4 Cup Vertical	78.74	2.00	25.0	11.4
CLV82	5 Cup Vertical	98.43	2.50	31.4	14.2
CLV910	6 Cup Vertical	118.11	3.00	36.4	16.5

CL3

Horizontals

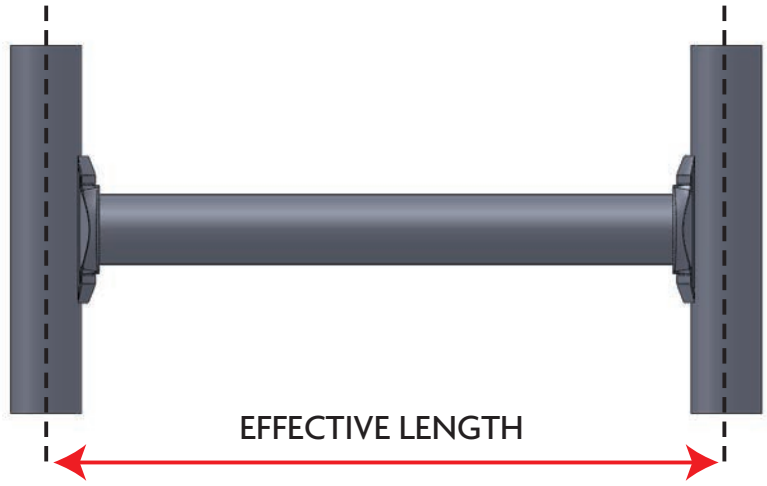

Product Code	Description	Bay Length		Weight	
		IN	MM	LB	KG
CLH110	1′-10″ Cup Lock	22	0.560	5.3	2.4
CLH27	2′-7″ Cup Lock	31	0.788	7.1	3.2
CLH30	3′ Cup Lock	36	0.914	7.9	3.6
CLH36	3′-6″ Cup Lock	42	1.067	9.5	4.3
CLH40	4′ Cup Lock	48	1.219	10.6	4.8
CLH50	5′ Cup Lock	60	1.524	13.2	6.0
CLH60	6′ Cup Lock	72	1.829	15.4	7.0
CLH70	7′ Cup Lock	84	2.134	17.9	8.1
CLH80	8′ Cup Lock	96	2.438	20.5	9.3
CLH90	9′ Cup Lock	108	2.743	23.1	10.5
CLH100	10′ Cup Lock	120	3.048	25.4	11.5

Product Code	Description	Bay Length	Weight	
		MM	LB	KG
CLH110	1′-10″ Cup Lock	0.560	5.3	2.4
CLH27	2′-7″ Cup Lock	0.788	7.1	3.2
CLH211	2′-11″ Cup Lock	0.90	8.2	3.7
CLH36	3′-6″ Cup Lock	1.067	9.5	4.3
CLH41	4′-1″ Cup Lock	1.250	10.8	4.9
CLH43*	4′-3″ Cup Lock	1.30	11.7	5.3
CLH411	4′-11″ Cup Lock	1.50	12.8	5.8
CLH511	5′-11″ Cup Lock	1.80	15.2	6.9
CLH70	7′ Cup Lock	2.134	17.9	8.1
CLH82	8′-2″ Cup Lock	2.50	21.2	9.6
CLH100	10′ Cup Lock	3.048	25.4	11.5

** Item not stocked*

CL4 Trusses

Product Code	Description	Effective Length		Weight	
		IN	MM	LB	KG
CLTB60	6′ Cup Lock Truss	72	1.83	32.63	14.8
CLTB70	7′ Cup Lock Truss	84	2.13	35.3	16.0
CLTB80	8′ Cup Lock Truss	96	2.44	53.8	24.4
CLTB82*	8′-2″ Cup Lock Truss	98	2.50	57.8	26.2
CLTB90	9′ Cup Lock Truss	108	2.74	61.1	27.7
CLTB100	10′ Cup Lock Truss	120	3.05	68.8	31.2
CLTB120	12′ Cup Lock Truss	144	3.66	82.7	37.5
CLTB140	14′ Cup Lock Truss	168	4.27	95.0	43.1
CLTB160	16′ Cup Lock Truss	192	4.88	109.1	49.5
CLTB180	18′ Cup Lock Truss	216	5.49	125.0	56.7
CLTB200	20′ Cup Lock Truss	240	6.10	136.9	62.1
CLTB210	21′ Cup Lock Truss	252	6.40	140.7	63.8

** Item not stocked*

CL5 Clamp Braces

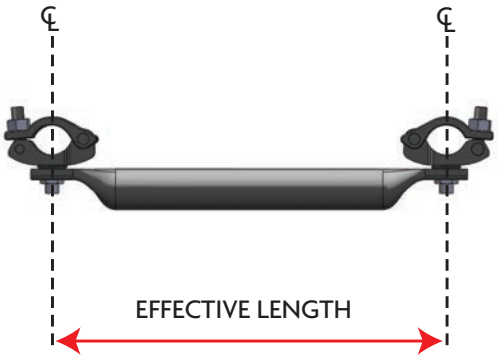

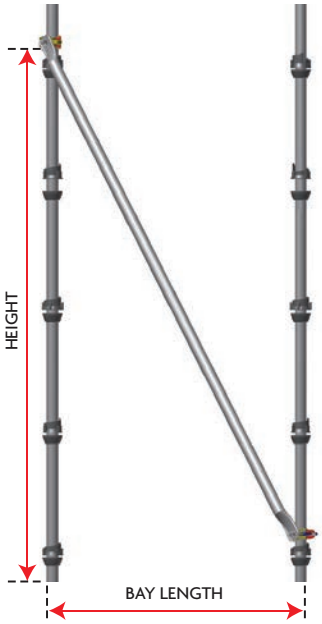

CLCB

Product Code	Description	Bay Length		Effective Length		Weight	
		IN	MM	IN	MM	LB	KG
CLCB30*	3′ Clamp Brace Swivel	36	0.914	86.59	2.199	18.08	8.2
CLCB40*	4′ Clamp Brace Swivel	48	1.219	92.23	2.343	18.74	8.5
CLCB50	5′ Clamp Brace Swivel	60	1.524	99.00	2.515	19.18	8.7
CLCB60*	6′ Clamp Brace Swivel	72	1.829	106.70	2.710	22.05	10.0
CLCB70	7′ Clamp Brace Swivel	84	2.134	115.14	2.925	23.93	10.4
CLCB80	8′ Clamp Brace Swivel	96	2.438	124.16	3.154	25.81	10.8
CLCB82	8′-2″ Clamp Brace Swivel	98	2.500	126.05	3.202	25.79	11.7
CLCB86	8′-6″ Clamp Brace Swivel	101	2.570	128.27	3.258	26.23	11.9
CLCB90	9′ Clamp Brace Swivel	108	2.743	133.66	3.395	26.68	12.1
CLCB100	10′ Clamp Brace Swivel	120	3.048	143.53	3.646	28.22	12.8

Note: Braces are designed with a 2 meter (6′6″) vertical drop

**Item not stocked*

CL6

Face Braces

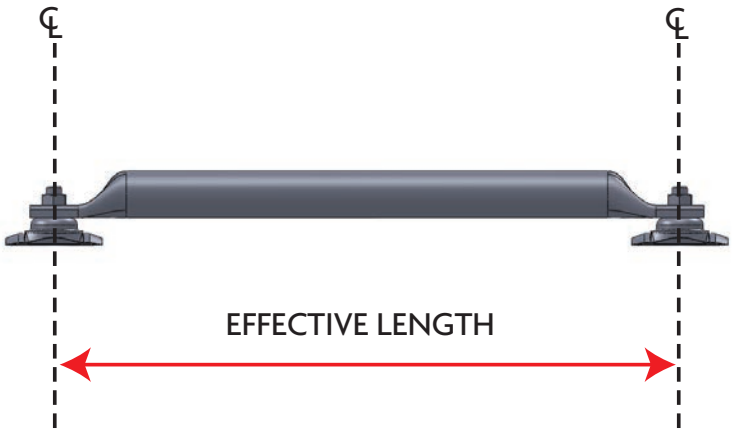

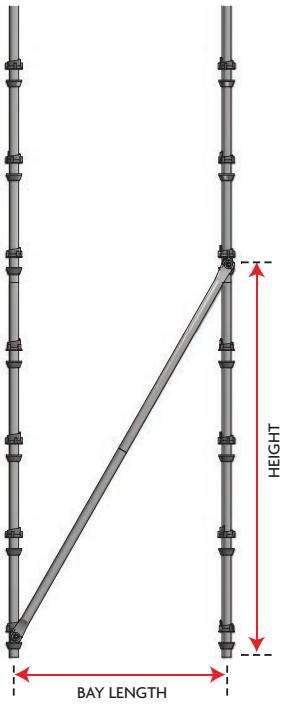

Product Code	Description	Effective Length		Weight	
		IN	MM	LB	KG
CLFB40*	4′ Face Brace Swivel	92.23	2.343	16.98	7.7
CLFB50*	5′ Face Brace Swivel	98.94	2.515	17.86	8.1
CLFB511*	5′-11″ Face Brace Swivel	105.93	2.691	20.39	9.3
CLFB70	7′ Face Brace Swivel	115.14	2.925	22.62	10.3
CLFB80	8′ Face Brace Swivel	124.16	3.154	23.26	10.6
CLFB82	8′-2″ Face Brace Swivel	126.05	3.202	23.32	10.6
CLFB90	9′ Face Brace Swivel	133.66	3.395	24.69	11.2
CLFB100	10′ Face Brace Swivel	143.53	3.646	26.32	11.9

Note: The Face brace is designed with an intended 2 meter (6′6″) vertical drop.

**Item not stocked*

CL7 Board Bracket

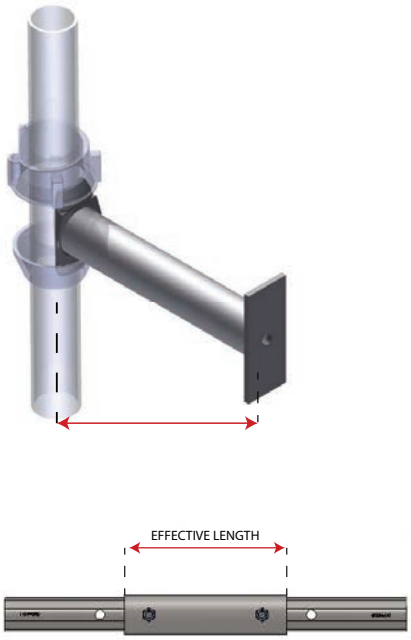

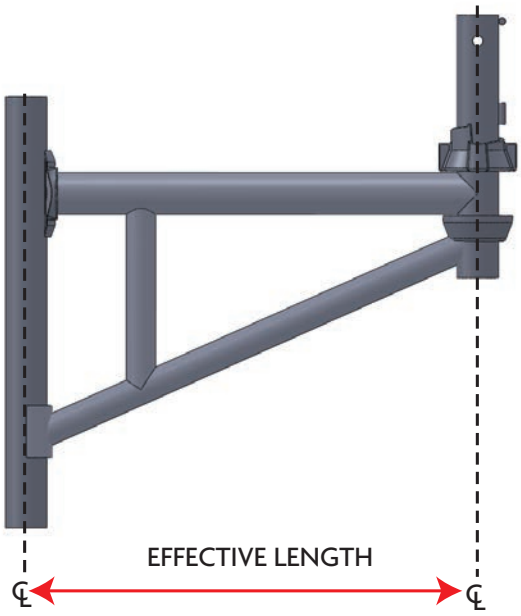

Product Code	Description	Effective Length		Weight	
		IN	MM	LB	KG
CLBB10	1′ Board Bracket	11.4	0.290	3.31	1.5
CLBB110	2′ Board Bracket	22.2	0.565	11.99	5.4
CLBB27	3′ Board Bracket	31.3	0.795	14.95	6.8
CLEA17	Cup Lock Ext. Adapter	7.87	0.200	4.48	2.0

CL8 Caster Adapter

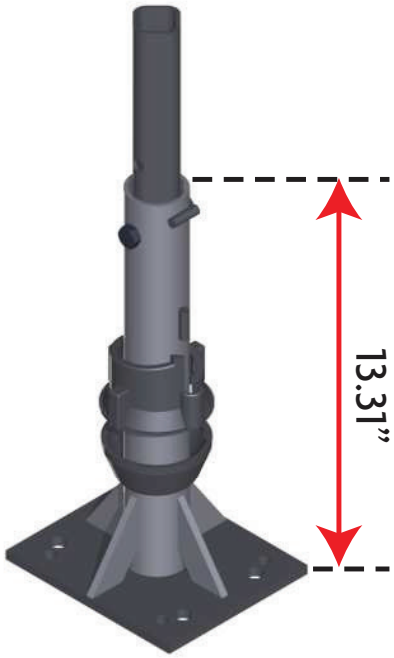

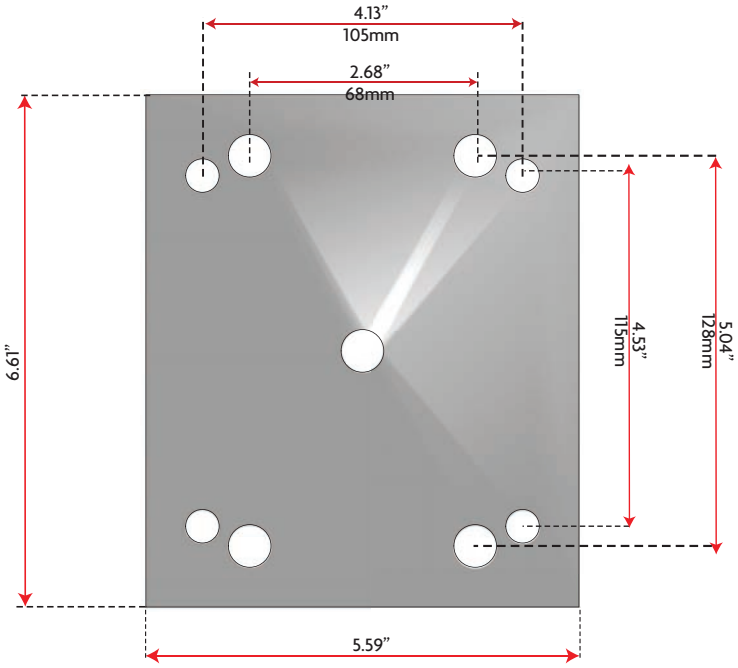

Product Code	Description	Weight	
		LB	KG
CLCA	Caster Adapter	9.6	4.4

CL9

Deck Adapter

Product Code	Description	Weight	
		LB	KG
CLDA	25″ Deck Adapter	10.8	4.9

CL10 California Guardrail

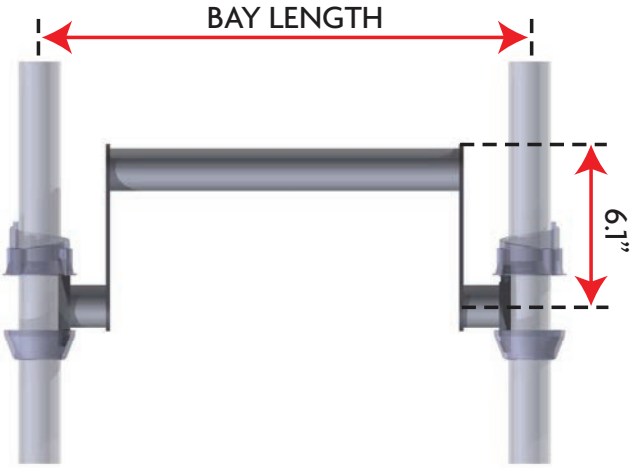

Product Code	Description	Bay Length		Weight	
		IN	MM	LB	KG
CLGR110	1′-10″ California Guardrail	22	0.560	7.2	3.3
CLGR27	2′-7″ California Guardrail	31	0.788	9.0	4.1
CLGR30	3′ California Guardrail	36	0.914	9.5	4.3
CLGR40	4′ California Guardrail	48	1.219	9.5	5.7
CLGR50	5′ California Guardrail	60	1.524	12.5	6.6
CLGR60	6′ California Guardrail	72	1.829	14.4	10.8
CLGR70	7′ California Guardrail	84	2.134	19.8	11.7
CLGR80	8 California Guardrail	96	2.438	22.3	11.9
CLGR90	9′ California Guardrail	108	2.743	24.4	12.1
CLGR100	10′ California Guardrail	120	3.048	27.2	12.8

CL11 Guardrail Post

Product Code	Description	Weight	
		LB	KG
CLGRP	Cup Lock Guardrail Post	23.6	10.7

CL12 Support Spigot Clamp

Product Code	Description	Weight	
		LB	KG
CLSS	Cup Lock Support Spigot	6.8	3.1

CL13 Aluminum Stair Stringers

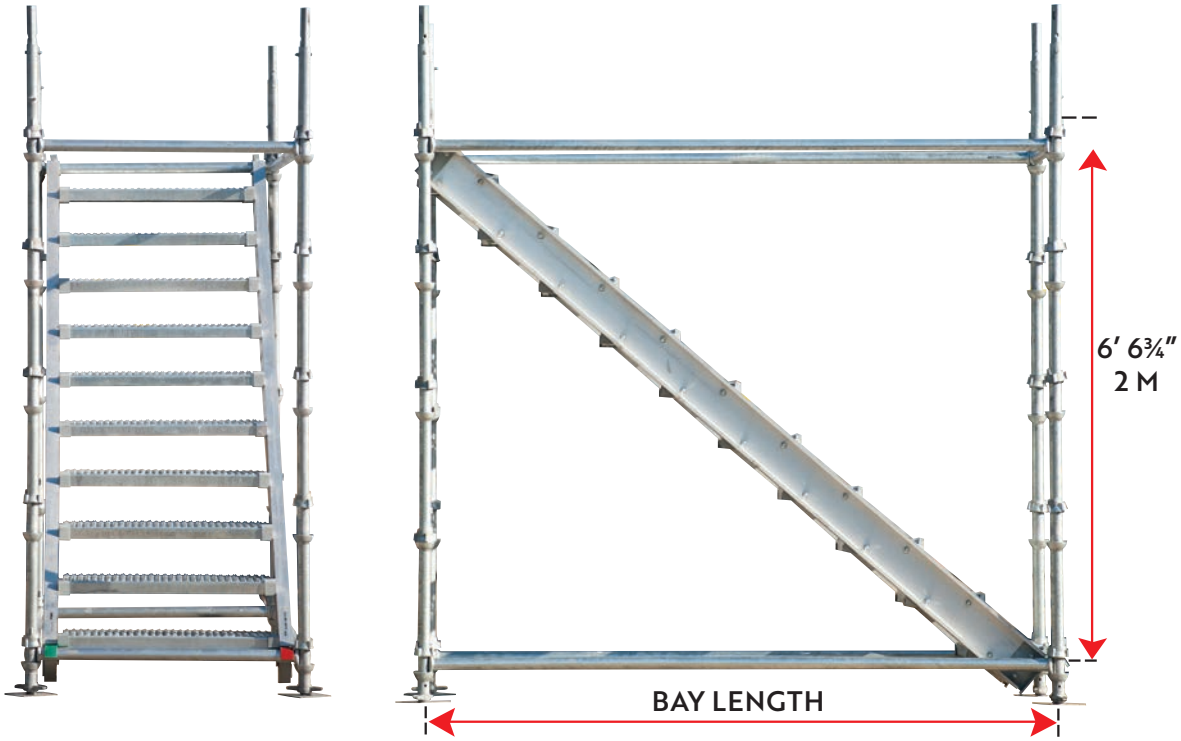

Product Code	Description	Bay Length		Height		Weight	
		IN	MM	IN	MM	LB	KG
CLSSL70	Cup Lock 7′ Str Stringer Aluminum	84	2.1	6′-6″	2	58	26.3
CLSSR70	Cup Lock 7′ Str Stringer Aluminum	84	2.1	6′-6″	2	58	26.3
CLSSL80	Cup Lock 8′ Str Stringer Aluminum	96	2.4	6′-6″	2	67	30.4
CLSSR80	Cup Lock 8′ Str Stringer Aluminum	96	2.4	6′-6″	2	67	30.4
CLSSL82	Cup Lock 8′-2″ Str Stringer Aluminum	98	2.5	6′-6″	2	68	30.7
CLSSR82	Cup Lock 8′-2″ Str Stringer Aluminum	98	2.5	6′-6″	2	68	30.7

CL14 Stair Treads

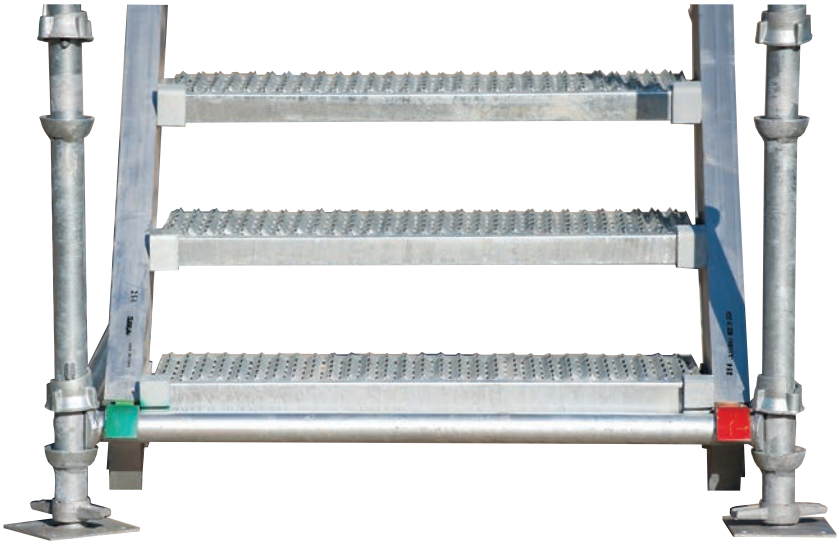

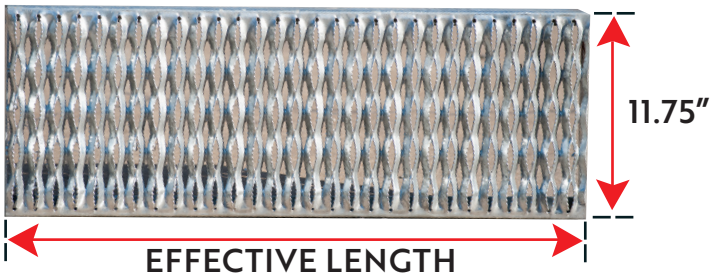

Product Code	Description	Effective Length		Weight	
		IN	MM	LB	KG
CLST36	3'-6" Stair Tread	33.0	0.84	13.5	6.14
CLST40	4' Stair Tread	39.4	1.00	15.9	7.2

03

Ring Lock

RL1

Tube Specifications

Product Code	Diameter		Thickness		Min. Tensile		Min. Yield	
	IN	MM	IN	MM	MPA	KSI	MPA	KSI
RLV	1.9	48.3	0.118	3.0	517	75,000	414	60,000
RLH	1.9	48.3	0.118	3.0	517	75,000	414	60,000
RLFB	1.9	48.3	0.098	2.5	483	70,000	345	50,000
RLCB	1.9	48.3	0.098	2.5	483	70,000	345	50,000

NOTE: Minimum Elongation at 2in/50.8mm is 20%

RL2

Verticals

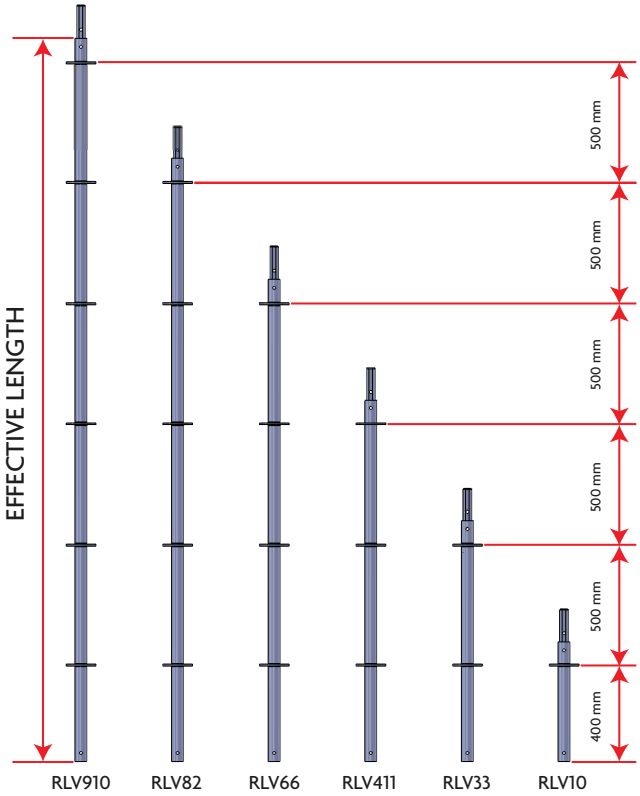

Product Code	Description	Effective Length		Weight	
		IN	MM	LB	KG
RLV10	1 Ring Vertical W/Spigot	19.69	0.50	6.9	3.1
RLV33	2 Ring Vertical W/Spigot	39.37	1.00	12.1	5.5
RLV411	3 Ring Vertical W/Spigot	59.06	1.50	17.3	7.7
RLV66	4 Ring Vertical W/Spigot	78.74	2.00	22.3	10.1
RLV82	5 Ring Vertical W/Spigot	98.43	2.50	28.8	13.1
RLV910	6 Ring Vertical W/Spigot	118.11	3.00	33.2	15.0

RL3 Ledgers

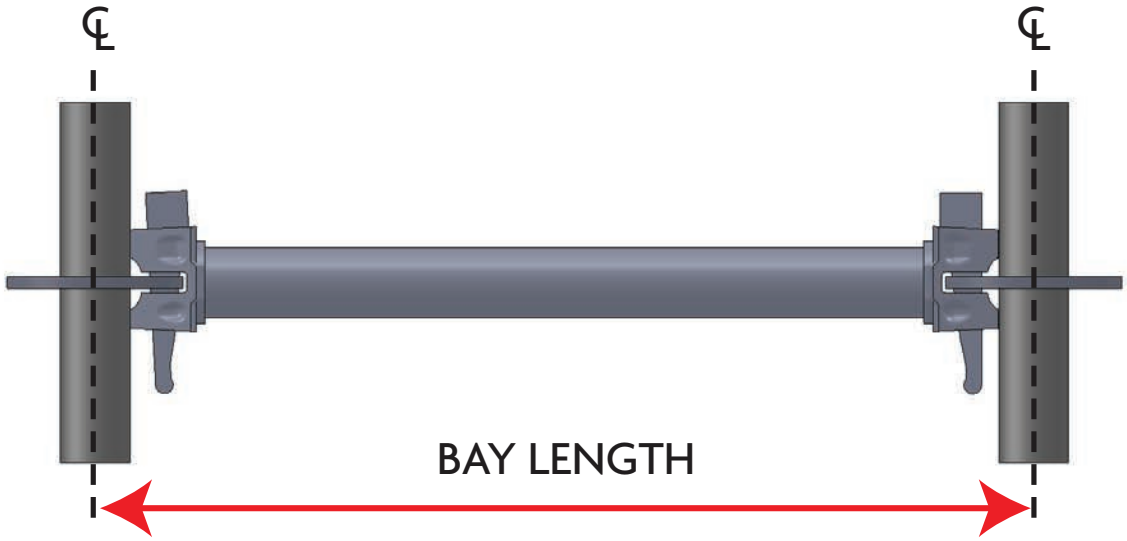

Product Code	Description	Bay Length		Weight	
		IN	MM	LB	KG
RLH10	1' Ledger	11.81	0.300	3.6	1.62
RLH20	2' Ledger	24.02	0.610	6.7	3.04
RLH30	3' Ledger	35.98	0.914	9.1	4.13
RLH36S	3'-6" Ledger	41.93	1.065	10.1	4.56
RLH40	4' Ledger	48.03	1.220	11.5	5.20
RLH50	5' Ledger	60.00	1.524	13.6	6.18
RLH54	5'-4" Ledger	63.98	1.625	14.6	6.63
RLH60	6' Ledger	72.00	1.829	16.1	7.31
RLH70	7' Ledger	83.86	2.130	18.5	8.38
RLH80	8' Ledger	96.06	2.440	21.1	9.57
RLH90	9' Ledger	107.99	2.743	24.3	11.02
RLH100	10' Ledger	120.12	3.051	26.4	11.96

Product Code	Description	Bay Length	Weight	
		MM	LB	KG
RLH14	1'-4" Ledger	0.400	5.0	2.29
RLH24	2'-4" Ledger	0.732	7.7	3.49
RLH33	3'-3" Ledger	0.990	9.3	4.24
RLH36	3'-6" Ledger	1.088	10.6	4.79
RLH43	4'-3" Ledger	1.286	11.9	5.40
RLH410	4'-10" Ledger	1.484	13.8	6.27
RLH52	5'-2" Ledger	1.572	14.1	6.39
RLH55	5'-5" Ledger	1.651	15.0	6.80
RLH69	6'-9" Ledger	2.072	18.0	8.16
RLH70	7' Ledger	2.130	18.5	8.38
RLH86	8'-6" Ledger	2.572	22.5	10.19
RLH100	10' Ledger	3.051	26.4	11.96
RLH101	10'-1" Ledger	3.070	28.0	12.70

RL4 Ledgers - Canadian Sizes

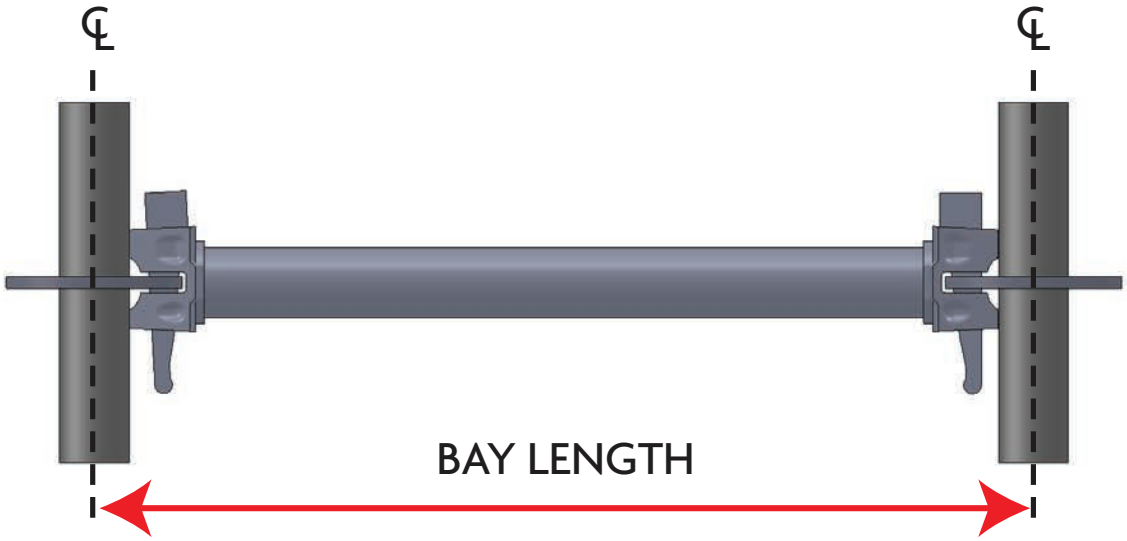

Product Code	Description	Effective Length		Weight	
		IN	MM	LB	KG
RLH22	2′-2″ Ledger	25.59	0.650	6.9	3.14
RLH211	2′-11″ Ledger	34.65	0.880	8.8	3.97
RLH36S	3′-6″ Ledger	41.93	1.065	10.1	4.56
RLH39	3′-9″ Ledger	45.28	1.150	10.8	4.89
RLH52	5′-2″ Ledger	61.89	1.572	14.1	6.39
RLH70	7′ Ledger	83.86	2.130	18.5	8.38
RLH100	10′ Ledger	120.12	3.051	26.4	11.96

RL5 Double Ledgers

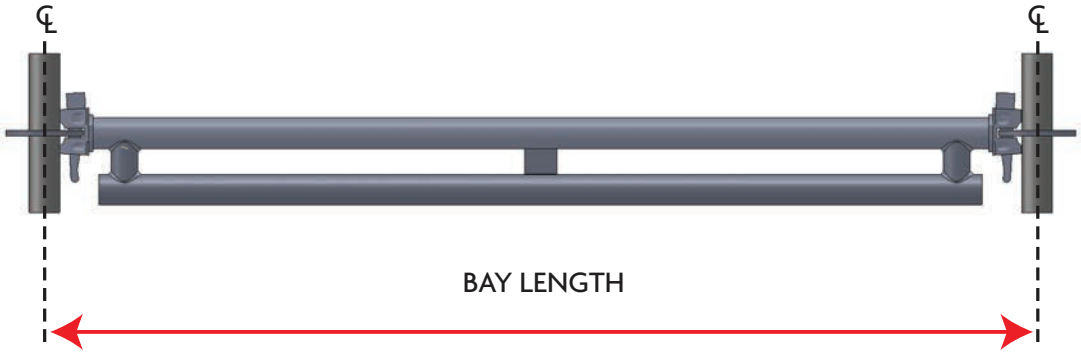

Product Code	Description	Bay Length		Weight	
		IN	MM	LB	KG
RLDL47	4′-7″ Double Ledger	55.12	1.40	26.9	12.20
RLDL50	5′ Double Ledger	60.00	1.524	25.6	11.59
RLDL52	5′-2″ Double Ledger	61.89	1.572	26.7	12.09
RLDL54	5′-4″ Double Ledger	63.98	1.625	28.0	12.70
RLDL60	6′ Double Ledger	72.01	1.829	30.3	13.76
RLDL69	6′-9″ Double Ledger	81.57	2.072	29.8	13.51
RLDL70	7′ Double Ledger	83.86	2.130	35.4	16.07
RLDL80	8′ Double Ledger	96.06	2.440	39.9	18.12
RLDL86	8′-6″ Double Ledger	101.26	2.572	42.3	19.19
RLDL100	10′ Double Ledger	120.12	3.051	51.5	23.38

RL6 Lattice Girder

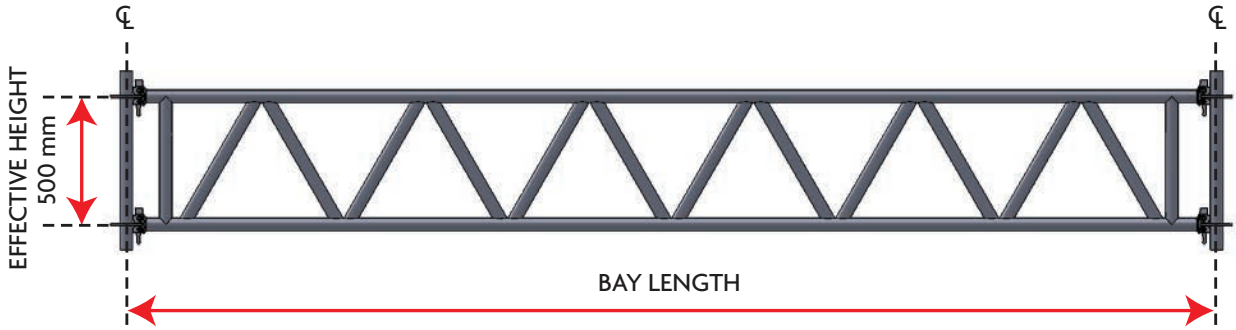

Product Code	Description	Bay Length		Weight	
		IN	MM	LB	KG
RLLG05	5′ Lattice Girder	60.0	1.52	38.8	17.6
RLLG06	6′ Lattice Girder	72.0	1.83	43.4	19.7
RLLG07	7′ Lattice Girder	83.86	2.130	53.2	24.15
RLLG086	8′-6″ Lattice Girder	101.26	2.572	62.2	28.20
RLLG10	10′ Lattice Girder	120.12	3.051	70.3	31.90
RLLG14	14′ Lattice Girder	168.00	4.267	99.7	45.24
RLLG16	16′ Lattice Girder	191.98	4.876	109.9	49.85
RLLG18	18′ Lattice Girder	216.00	5.486	123.5	56.00
RLLG20	20′ Lattice Girder	240.00	6.096	138.6	62.87
RLLG21	21′ Lattice Girder	252.00	6.401	139.7	63.35
RLLG28	28′ Lattice Girder	336.00	8.534	207.2	94.00

RL7 Board Bracket

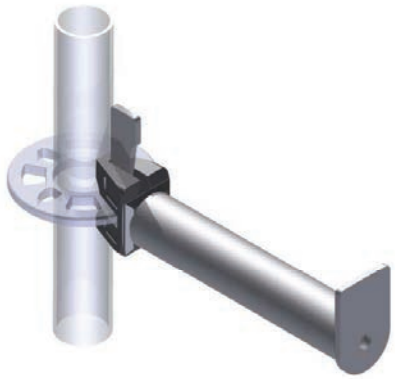

RLBB12

RLBB16, RLBB20, RLBB22, RLBB25, RLBB211

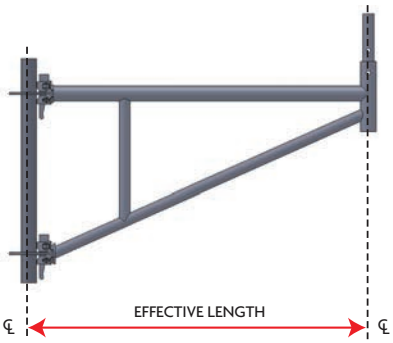

RLBB30, RLBB33, RLBB36S

Product Code	Description	Bay Length		Weight	
		IN	MM	LB	KG
RLBB12	12″ Board Bracket	12.60	0.320	3.8	1.71
RLBB16	16″ Board Bracket	15.75	0.400	10.4	4.71
RLBB20	24″ Board Bracket	24.02	0.610	13.0	5.90
RLBBC22*	25″ Board Bracket	25.59	0.650	13.4	6.10
RLBB25	26 13/16″ Board Bracket	29.02	0.737	14.5	6.59
RLBB211	34″ Board Bracket	34.64	0.880	16.4	7.54
RLBB30	32″ Board Bracket	36.25	0.921	18.9	8.56
RLBB33	35″ Board Bracket	39.17	0.995	19.9	9.04
RLBB36	45″ Board Bracket	45.28	1.150	23.0	10.42
RLBB36S	42″ Board Bracket	41.93	1.065	10.6	9.33
RLBB39	45″ Board Bracket	45.28	1.15	23.4	10.61

** Only Stocked in Canada*

RL8 Starter Collar

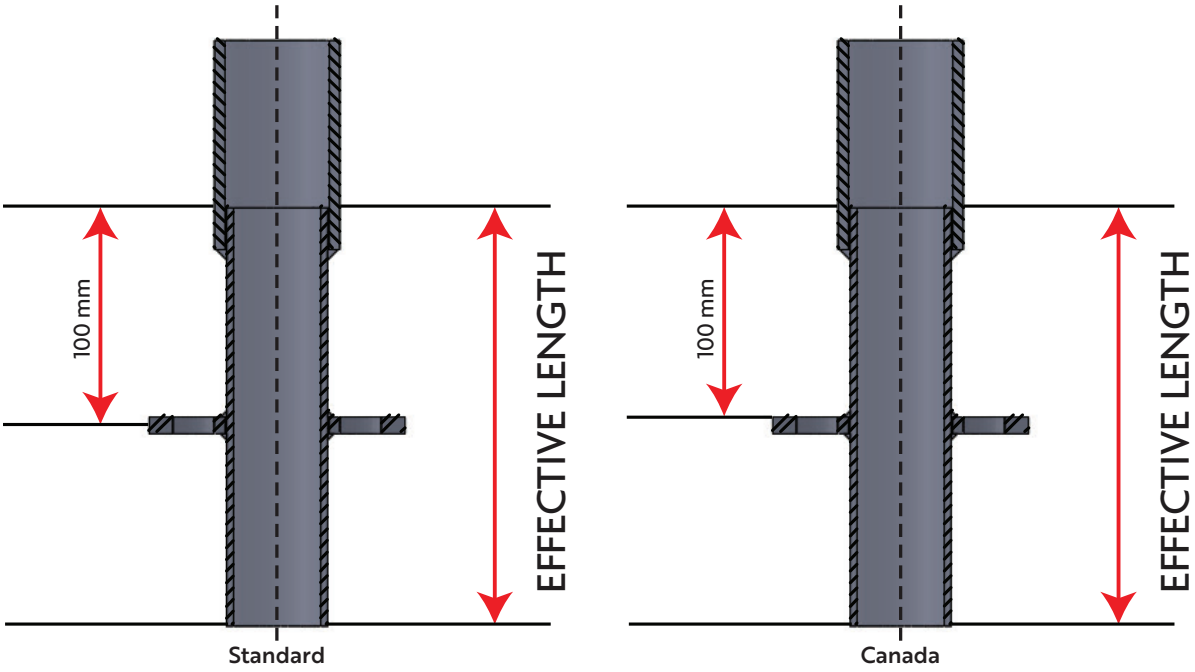

Product Code	Description	Effective Length		Weight	
		IN	MM	LB	KG
RLBCS	Starter Collar Short	6.46	0.16	3.7	1.7
RLBCL	Starter Collar Long	7.87	0.20	4.5	2.1

RL9 Vertical Diagonal

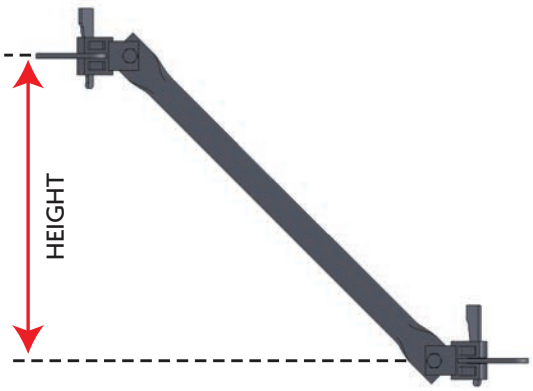

Product Code	Description	Bay Length		Height		Weight	
		IN	MM	IN	MM	LB	KG
RLVD30	3′ Vertical Diagonal	36.0	0.91	78.74	2	10.4	4.7
RLVD36S	3′-6″ Vertical Diagonal	42.0	1.07	78.74	2	12.2	5.5
RLVD40	4′ Vertical Diagonal	48.0	1.22	78.74	2	13.93	6.3
RLVD50	5′ Vertical Diagonal	60.0	1.52	78.74	2	17.4	7.9
RLVD60	6′ Vertical Diagonal	72.0	1.83	78.74	2	20.9	9.5
RLVD70	7′ Vertical Diagonal	84.0	2.13	78.74	2	24.4	11.1
RLVD80x1	8′ Vertical Diagonal	96.0	2.44	39.37	1	14.0	6.4
RLVD80x15	8′ Vertical Diagonal	96.0	2.44	59.1	1.5	27.9	12.7
RLVD80	8′ Vertical Diagonal	96.0	2.44	78.74	2	27.9	12.7
RLVD100	10′ Vertical Diagonal	120.08	3.05	78.74	2	34.8	15.8

RL10 Vertical Diagonal Cont.

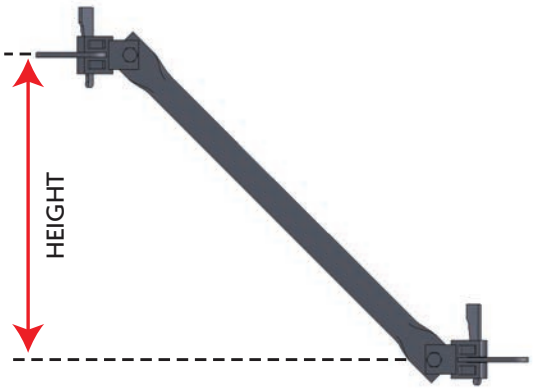

Product Code	Description	Bay Length		Height		Weight	
		IN	MM	IN	MM	LB	KG
RLVD36	3′-6″ Vertical Diagonal	42	1.09	78.74	2	12.2	5.5
RLVD43	4′-3″ Vertical Diagonal	51	1.29	78.74	2	14.8	6.7
RLVD410	4′-10″ Vertical Diagonal	58	1.48	78.74	2	16.8	7.6
RLVD52	5′-2″ Vertical Diagonal	62	1.57	78.74	2	17.9	8.1
RLVD69	6′-9″ Vertical Diagonal	81	2.07	78.74	2	23.5	10.7
RLVD70	7′ Vertical Diagonal	84	2.13	78.74	2	24.4	11.1
RLVD86	8′-6″ Vertical Diagonal	102	2.57	78.74	2	29.6	13.5
RLVD100	10′ Vertical Diagonal	120.08	3.05	78.74	2	34.8	15.8

Product Code	Description	Bay Length		Height		Weight	
		IN	MM	IN	MM	LB	KG
RLVD36S	3′-6″ Vertical Diagonal	42.0	1.07	78.74	2	12.2	5.5
RLVD39	3′-9″ Vertical Diagonal	45.0	1.15	78.74	2	13.1	5.9
RLVD52	5′-2″ Vertical Diagonal	62.0	1.57	78.74	2	17.9	8.1
RLVD70	7′ Vertical Diagonal	84.0	2.13	78.74	2	24.4	11.1
RLVD100	10′ Vertical Diagonal	120.08	3.05	78.74	2	34.8	15.8

RL11 Guardrail Post

Product Code	Description	Effective Length		Weight	
		IN	MM	LB	KG
RLGRP	Ring Lock Guardrail Post	59.1	1.5	20.1	9.1

RL12 Suspended Connector

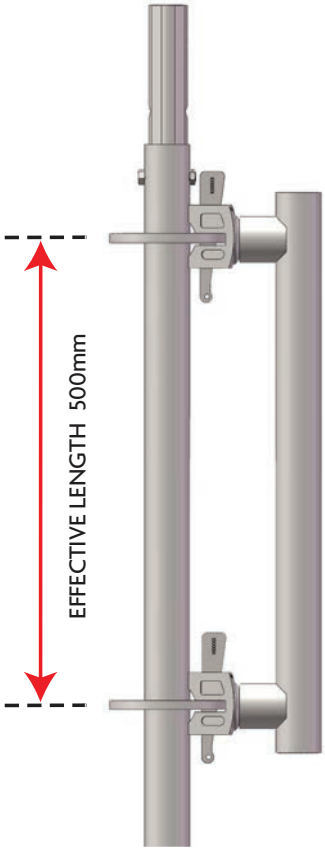

Product Code	Description	Effective Length		Weight	
		IN	MM	LB	KG
RLSC	Ring Lock Suspended Connector	19.7	0.50	7.1	3.2

Ring lock Suspended Connector is intended to be used in pairs.

RL13

Support Spigot Clamps

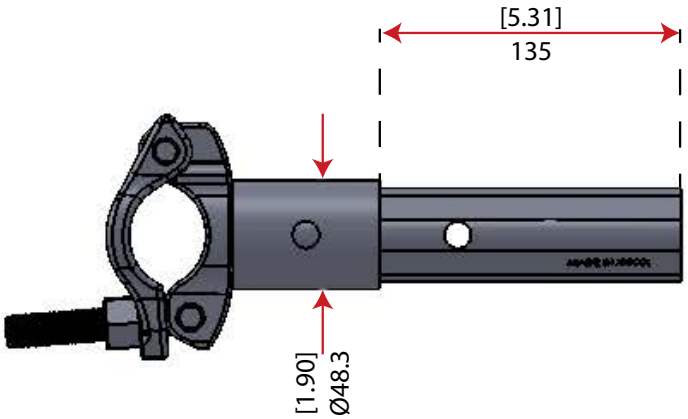

RLSSC

RLSSW

Product Code	Description	Weight	
		LB	KG
RLSSC	Support Spigot Clamp with I-Bolt Clamp	5.2	2.4

RL15 Stair Stringers & Stair Steps

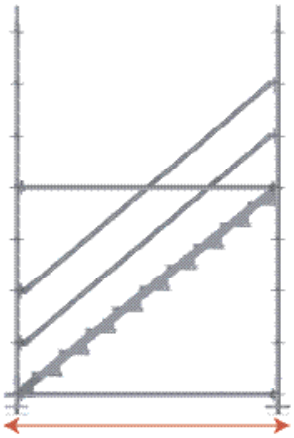

BAY LENGTH

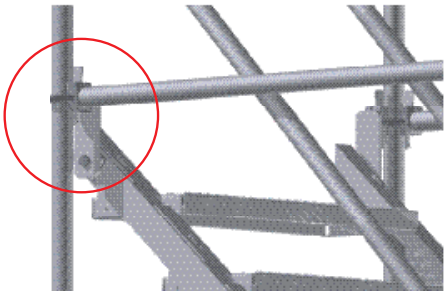

OFFSET STRINGER
RLSS7

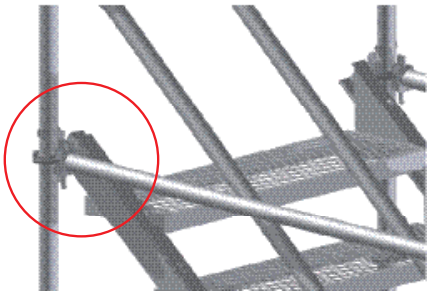

STRAIGHT CHANNEL
RLSS7C, RLSS8, RLSS86

Product Code	Description	Bay Length		Height		Weight	
		IN	MM	IN	MM	LB	KG
RLSS7C	7′ Ring Stair Stringer (Straight)	7′	2.13	6′-6″	2	52.9	24.0
RLSS8	8′ Ring Stair Stringer (Straight)	8′	2.44	6′-6″	2	34.6	15.7
RLSS86	8′-6″ Ring Stair Stringer (Straight)	8′-6″	2.57	6′-6″	2	35.3	16.0

RL14 Stair Stringers & Stair Steps

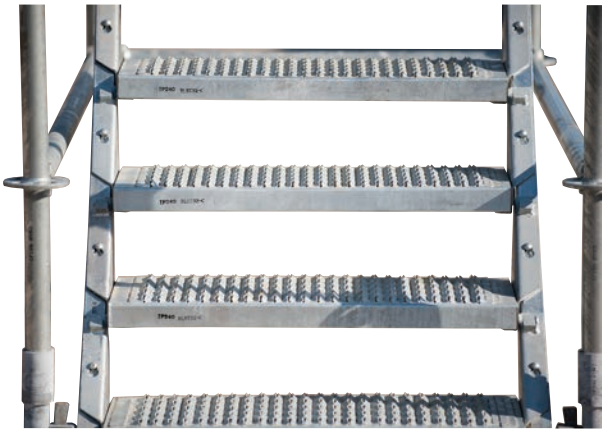

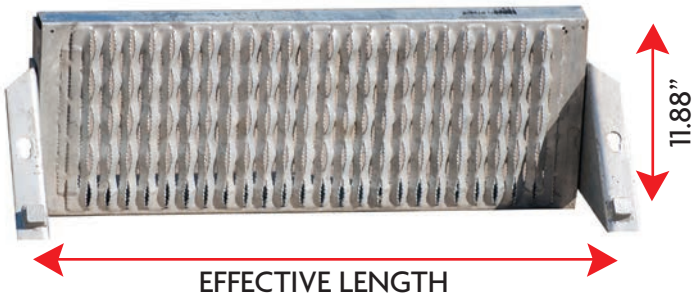

Product Code	Description	Effective Length		Tread Length		Weight	
		IN	MM	IN	MM	LB	KG
RLST32C	32" Ring Lock Stair Tread w/ L&R Hangers (For RLSS7-C)	33.75	0.86	31.57	0.8	21.4	9.7
RLST36	30" Ring Lock Stair Tread w/ L&R Hangers (for RLSS7)	32.18	0.82	30.01	0.76	13.9	6.3
RLST40	37.8" Ring Lock Stair Tread w/ L&R Hangers (for RLSS8)	40.02	1.02	37.85	0.96	15.7	7.1
RLST43	40.5" Ring Lock Stair Tread w/ L&R Hangers (For RLSS86)	42.67	1.08	40.5	1.03	18.5	8.4

RL16 Ring Lock Caster Adapter

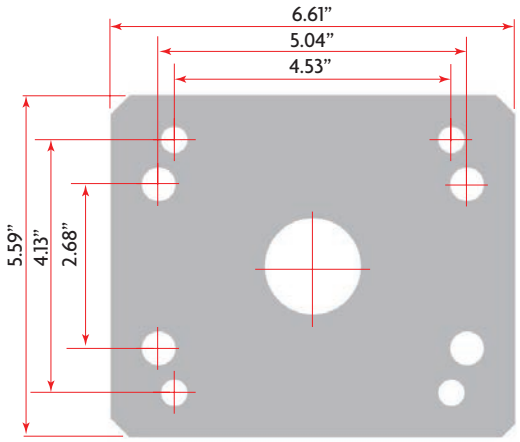

RLCA

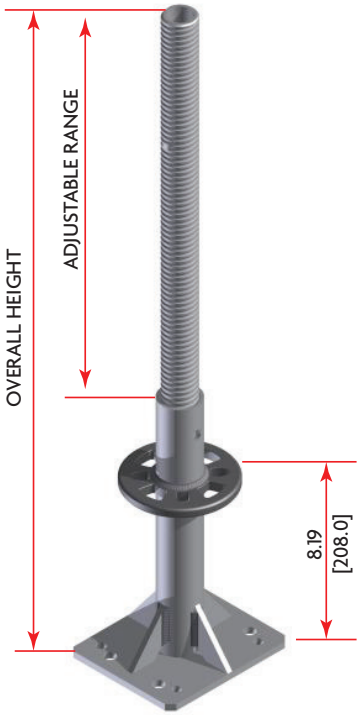

RLCAJ

Product Code	Description	Overall Height		Adjustable Range		Weight	
		IN	MM	IN	MM	LB	KG
RLCAJ	Ring Lock Adjustable Caster Adapter	30.35	0.8	21.24	0.3	15.3	7
RLCA	Ring Lock Caster Adapter	12.13	0.3	N/A	N/A	10.2	4
RLCAL	Ring Lock Caster Adapter Canadian	12.3	0.3	N/A	N/A	10.2	4

04

Accessories

AC1 System Jack

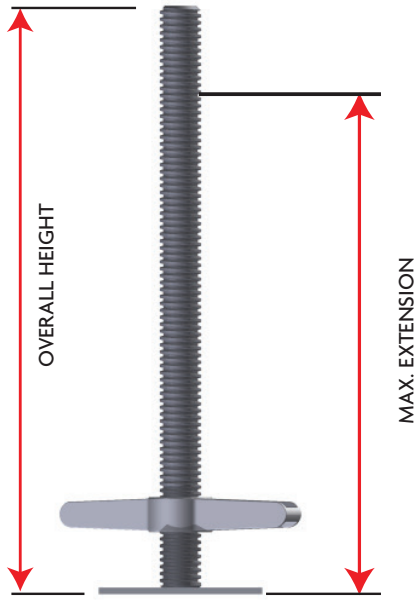

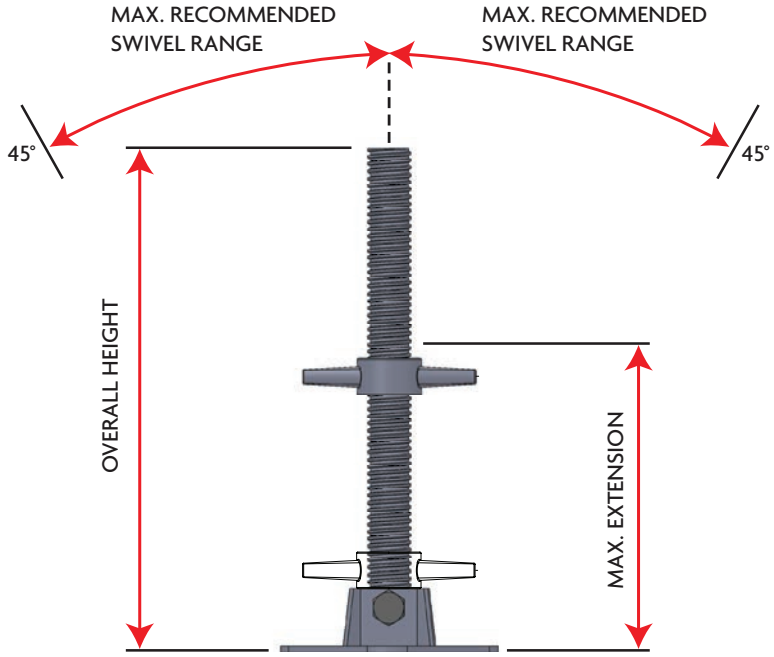

Product Code	Description	Max Extention		Overall Height		Weight	
		IN	MM	IN	MM	LB	KG
BPSJB	21 In System Jack with Base Plate	15	0.38	22.22	0.54	8.2	3.74
BPSJS	Swivel System Jack 21″	14	0.37	20.98	0.53	9.1	4.15

Disclaimer

Swivel jacks should be anchored to the structural surface or restrained. Anchors, bolts or restraints must hold 4 times the shear force that will be applied on the slope. If the angle will exceed 45° consult a Professional Engineer before erecting your structure. DSS/GSD recommends that you always consult a Professional Engineer before erecting a scaffold structure.

AC3 Universal System Spigot

Product Code	Description	Weight	
		LB	KG
PN-UCP	Universal System Spigot	1.7	0.8

The Universal System Spigot can be used in both Ring Lock and Cup Lock Systems.

AC4 Pins

PN-HP3

PN-SP125

PN-PTPU

Product Code	Description	Pin Diameter		Weight	
		IN	mm	LB	KG
PN-HP3	3″ Hinge Pin	0.35	9.0	0.15	0.071
PN-SP125	1/4″ X 1-1/4″ Snap Pin	0.24	6.0	0.04	0.02
PN-SP2	2″ Snap Pin	0.35	9.0	0.13	0.06
PN-PTPU	Pig Tail Pin Universal (1.69 - 1.9)	0.35	9.0	0.24	0.11

AC5 Gates

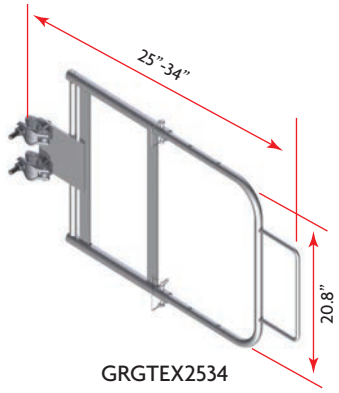

GRGTEX2534

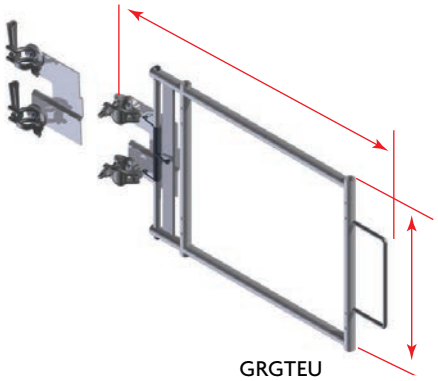

GRGTEU

GRGTEX3556

Product Code	Description	Min. Extension		Max. Extension	
		IN	MM	IN	MM
GRGTEX2534	Gate Expandable 25" to 34"	25.00	0.640	31.9	0.81
GRGTEX3556	Gate Expandable 35" to 56"	34.65	0.880	3.1	1.40
GRGTEU	Universal Swing Gate	N/A	N/A	2.1	0.96

RL15

Enclosure System Panel

System Components

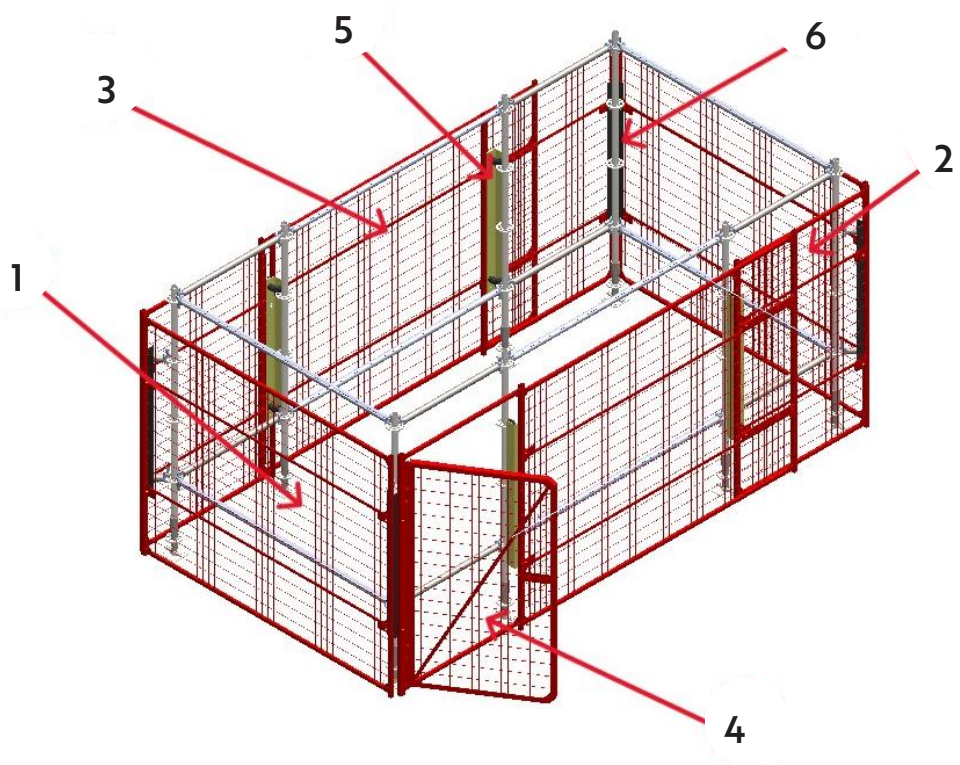

Part	Product Code(s)	Description	Quantity		
			7′ X 14′	8′ X 15′	8′6″ X 15′8″
1*	ESPE7 / ESPE8 / ESPE86	End Panel 7′ / End Panel 8′ / End Panel 8′6″	2*	2*	2*
2	ESP36	Panel	3	3	3
3	ESPM	Mid Panel	2	2	2
4	ESD	Door	1	1	1
5	ESFARL / ESFACL	Flat Adapter - Ring Lock / Cup Lock	4	4	4
6	ESCARL / ESCACL	Corner Adapter - Ring Lock / Cup Lock	4	4	4

** Note: For part 1, the Frame Tower Enclosure System, Frame size 7′x14′, 8′x15′ and 8′6″x15′8″ use End Panel 7′ / End Panel 8′ / End Panel 8′6″ respectively*

RL16

Enclosure System Panel Cont.

Additional Panel Sizes Available

Product Code	Description
ESP3	Enclosure System Panel 3′
ESP36	Enclosure System Panel 3′ 9″
ESP4	Enclosure System Panel 4′
ESP5	Enclosure System Panel 5′
ESP52	Enclosure System Panel 5′2″
ESP6	Enclosure System Panel 6′
ESP9	Enclosure System Panel 9′
ESP10	Enclosure System Panel 10′

Enclosure System Panel Disclaimers

- DSS recommends that all the job layouts be designed by a qualified person, as defined in ANSI 10.8:2001 section 3.63, and that all erection and dismantling be performed under the supervision and direction of a competent person as defined in OSHA 29 CFR 1926 Sub-part L.
- Always consider the load bearing capabilities of all components in the system and all loads that will be applied when using this equipment
- Published values are true for components in good condition. DSS recommends inspecting each component before use.

AC6

Gate Adapters

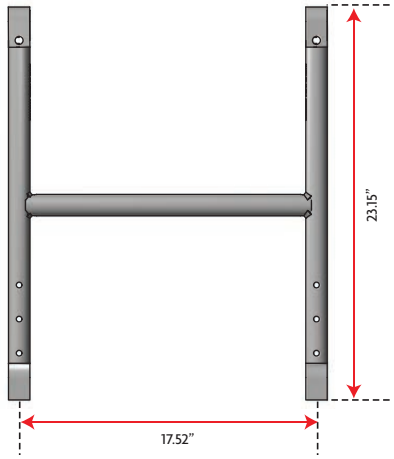

GRGTE-TBA

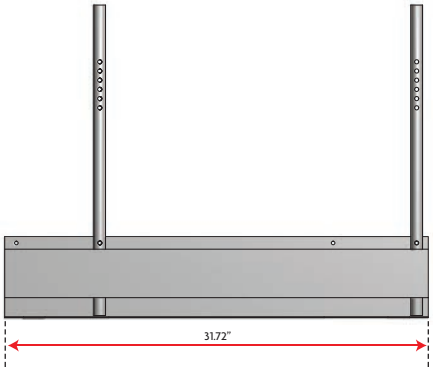

GRGTEU-T

Product Code	Description	Weight	
		LB	KG
GRGTE-TBA	Toe Board Adapter for GRGTE	6.8	3.1
GRGTEU-T	Adjustable Toe Board Set	9.7	4.4

48 Adjustable Toe Board

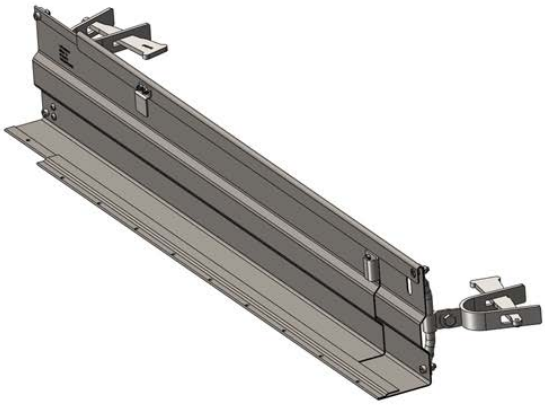

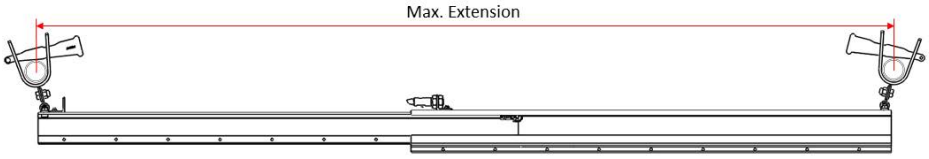

Top View

Product Code	Description	Min Extension		Max Extension		Height		Width		Weight	
		IN	MM	IN	MM	IN	MM	IN	MM	LB	KG
GRATB1	Adjustable Toe Board 24″ to 38″	24.1	612.1	38.4	975.4	6.8	172.1	3.2	81.5	11.7	5.3
GRATB2	Adjustable Toe Board 38″ to 66″	38.2	969.0	66.1	1677.5					16.9	7.7
GRATB3	Adjustable Toe Board 66″ to 120″	66.1	1680.0	120.4	3057.8					27.5	12.5

AC7 Universal Toe Board

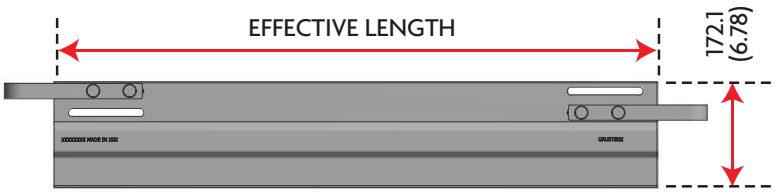

Product Code	Description	Effective Length		Weight	
		IN	MM	LB	KG
GRUSTB30	3′ Universal Toe Board	32.83	0.834	8.2	3.72
GRUSTB36	3′-6″ Universal Toe Board	38.78	0.985	9.96	4.52
GRUSTB39	3′-9″ Universal Toe Board	42.13	1.07	10.8	4.90
GRUSTB40	3′-9″ Universal Toe Board	44.88	1.14	11.46	5.20
GRUSTB50	5′ Universal Toe Board	56.69	1.44	14.33	6.50
GRUSTB52	5′-2″ Universal Toe Board	58.66	1.49	14.9	6.76
GRUSTB60	6′ Universal Toe Board	68.9	1.75	17.42	7.90
GRUSTB70	7′ Universal Toe Board	80.71	2.05	20.5	9.30
GRUSTB80	8′ Universal Toe Board	92.91	2.36	23.37	10.60
GRUSTB86	8′-6″ Universal Toe Board	98.03	2.49	24.91	11.30
GRUSTB90	9′ Universal Toe Board	104.72	2.66	26.46	12.00
GRUSTB100	10′ Universal Toe Board	116.93	2.97	29.54	13.40

AC8 Davit Arms

UDA

RLDA

Product Code	Description	Weight	
		LB	KG
UDA	Universal Davit Arm	24.7	11.2
RLDA	Ring Lock Davit Arm	23.7	10.7

AC9 Baskets

RKSRB

RKSRO

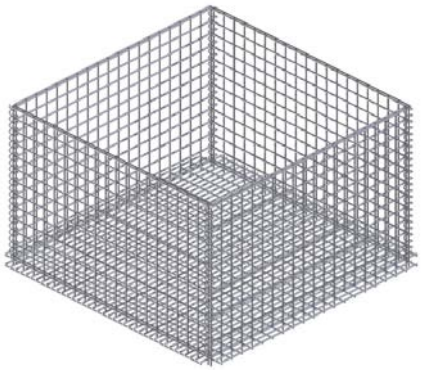

RKWBI

Product Code	Description	Dimensions	Weight	
			LB	KG
RKSRB	Shipping Basket	44″x44″x34″	160.1	72.60
RKSRO	Shipping Rack	44″x44″x34″	111.6	50.60
RKWBI	Wire Basket Insert for RKSRO	42″x42″x23″	141.1	64.00
RKSRO3626	Shipping Rack - 36x26	36″x36″x26″	143.3	65.00

AC10 Casters

CAS12P

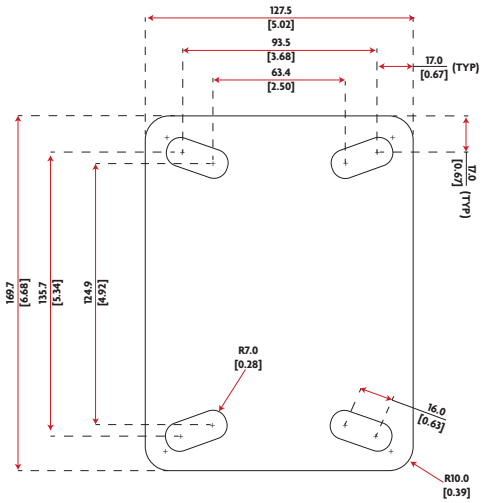

CAS8SA

CA8SA,CAS8B

Product Code	Description	Wheel Diameter		Weight		Adjustable Range	
		IN	MM	LB	MM	IN	MM
CAS8A	8″ Caster for 1-1/2″ Tubing	8″	0.20	11.8	5	N/A	N/A
CAS8B	8″ Caster for 1-5/8″ or 1-11/16″	8″	0.20	12.2	6	N/A	N/A
CAS8SA	8″ Adjustable Stem System Scaffold Caster	8″	0.20	17.9	8	6.00	0.15
CAS12P	12″ Scaffold Plate Caster	12″	0.30	38.4	17	N/A	N/A

AC11 Rack/Basket Shoes & Casters

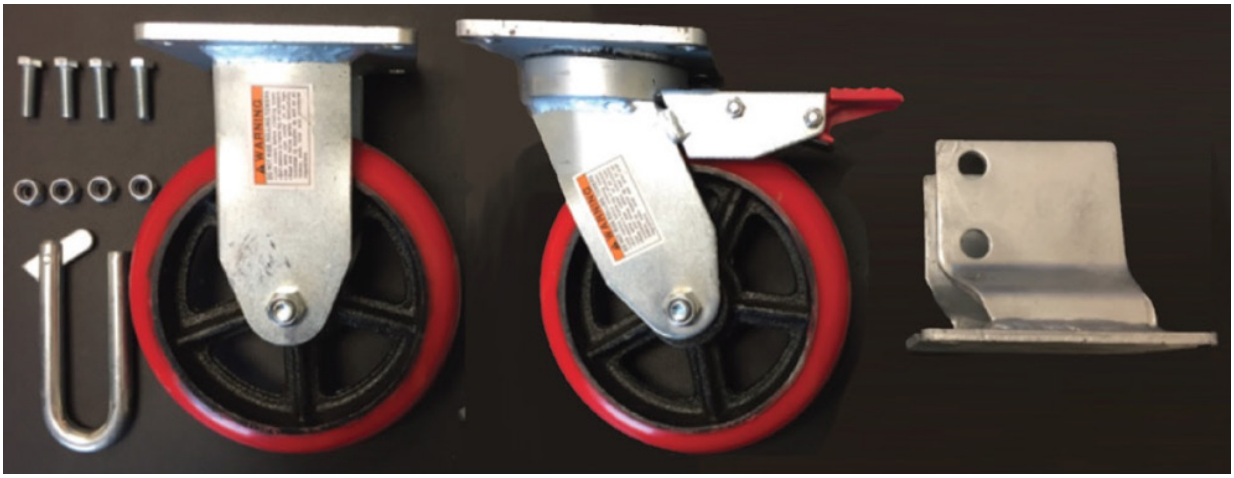

Product Code	Description	Wheel Diameter		Weight		Adjustable Range	
		IN	MM	LB	KG	IN	MM
CAS8RPHD	8″ Rigid Plate Caster Crown w/ Hardware	8.0	0.20	13.6	6.2	-	-
CAS8SPHD	8″ Swivel Plate Caster Crown w/ Hardware	8.0	0.20	16.9	7.7	-	-
CASRBA	Caster Shoe Racks / Basket	-	-	6.0	2.7	-	-

AC12 U-Jack

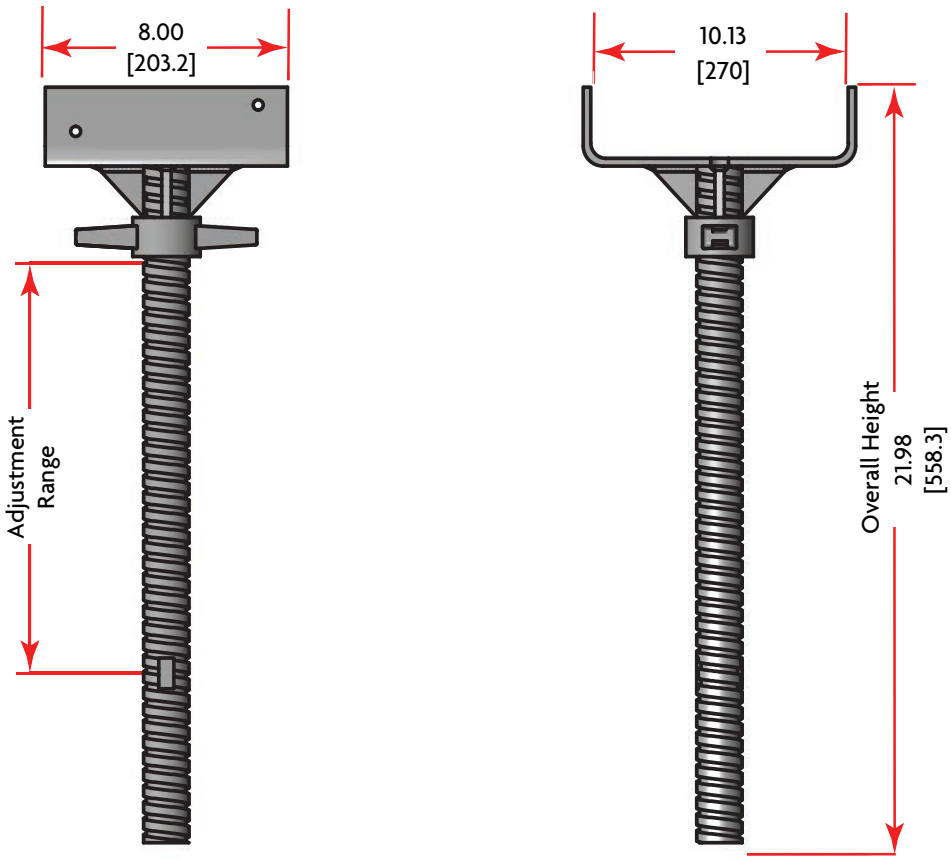

Product Code	Description	Adjustment Range		Weight	
		IN	MM	LB	KG
BPSJUHU	8″ x 10″ Universal U-Head Screw Jack	13.00	330	15.0	6.80

Threaded Tube O.D. 1.5″
Safe working loads are based on a 4:1 safety factor

AC13

Scaffold Tags

Additional tags and postings are available upon request.

HWNH108

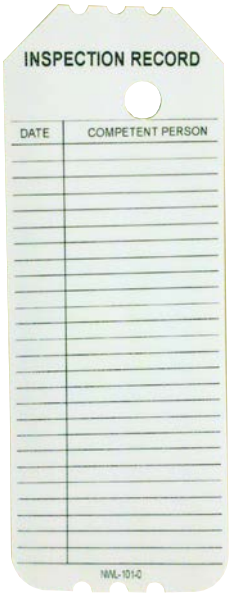

HWNWL101

HWNYL101

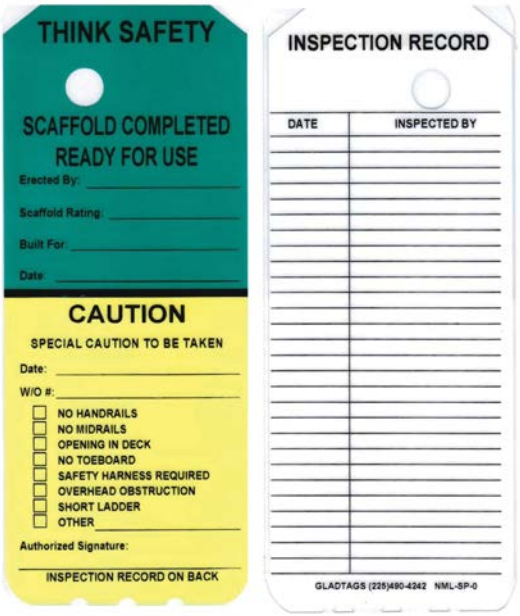

HWNML101

AC14

Scaffold Tags

Additional tags and postings are available upon request.

HWNML101

HWNRL101

05

Tube & Clamp

CP1 Twist Lock Tube

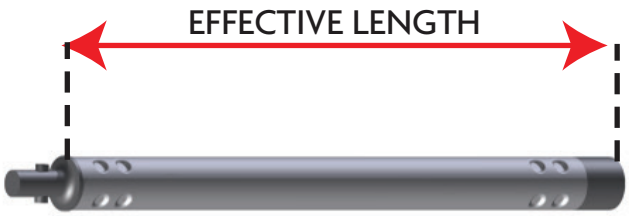

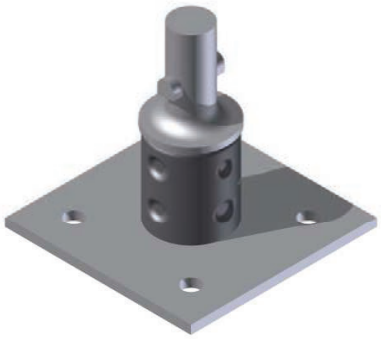

TLBPR

Product Code	Description	Effective Length		Weight	
		IN	MM	LB	KG
TL4	4′ Twist Lock Tube	48	1.22	9.6	4.3
TL6	6′ Twist Lock Tube	72	1.83	13.2	6.0
TL8	8′ Twist Lock Tube	96	2.44	17.1	7.7
TL10	10′ Twist Lock Tube	120	3.05	20.0	9.1
TL13	13′ Twist Lock Tube	156	3.96	26.5	12.0
TL16	16′ Twist Lock Tube	192	4.88	33.9	15.4

Product Code	Description	Weight	
		LB	KG
TLBPR	Twist Lock Base Plate Rigid	3.44	1.56

59

Open End Aluminum Tube

Product Code	Description	Length		Weight	
		FT	M	LB	KG
TUA484002	2′ x 1.9″ OD Plain End Alum Tube	2	0.61	1.88	0.85
TUA484003	3′ x 1.9″ OD Plain End Alum Tube	3	0.91	2.82	1.28
TUA484004	4′ x 1.9″ OD Plain End Alum Tube	4	1.22	3.76	1.71
TUA484005	5′ x 1.9″ OD Plain End Alum Tube	5	1.52	4.70	2.13
TUA484006	6′ x 1.9″ OD Plain End Alum Tube	6	1.83	5.64	2.56
TUA484008	8′ x 1.9″ OD Plain End Alum Tube	8	2.44	7.52	3.41
TUA484010	10′ x 1.9″ OD Plain End Alum Tube	10	3.05	9.40	4.26
TUA484012	12′ x 1.9″ OD Plain End Alum Tube	12	3.66	11.28	5.12
TUA484014	14′ x 1.9″ OD Plain End Alum Tube	14	4.27	13.16	5.97
TUA484016	16′ x 1.9″ OD Plain End Alum Tube	16	4.88	15.04	6.82
TUA484018	18′ x 1.9″ OD Plain End Alum Tube	18	5.49	16.92	7.68
TUA484020	20′ x 1.9″ OD Plain End Alum Tube	20	6.10	18.80	8.53

Additional sizes available. Call for price and availability.
Aluminum Tube (TUAxx): 1.9″ O.D. Schedule 40

CP2

I-Bolt Clamps

CMP1/2

CMP1/2Q

CMP1/2W

CMPRA

CMPSW

Product Code	Description	Weight	
		LB	KG
CMP12	1/2 Clamp (I-Bolt)	2.2	1.0
CMP12Q*	1/2 Clamp w/Q-Lock	2.4	1.1
CMP12W*	1/2 Clamp w/W-Lock	2.5	1.1
CMPRA	Right Angle Clamp (I-Bolt)	3.3	1.5
CMPSW	Swivel Clamp (I-Bolt)	4.4	2.0

** Item not stocked*

CP3

Wide Body Clamps

CMP4RA

CMP4SW

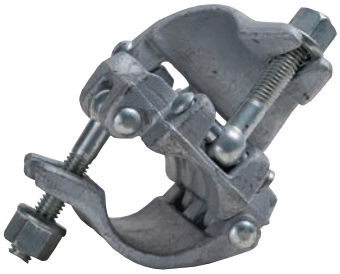

CMPNIRA

CMPNISW

Product Code	Description	Weight	
		LB	KG
CMP4RA	4″ Wide Body Right Angle Clamp (I-Bolt)	5.7	2.6
CMP4SW	4″ Wide Body Swivel Clamp (I-Bolt)	4.4	2.0
CMPNIRA	4″ Wide Body Right Angle Clamp (I-Bolt) - Italy	3.1	1.4
CMPNISW	4″ Body Swivel Clamp (I-Bolt) - Italy	3.1	1.4

CP4 Beam Clamp

CMPIBTCF

CMPIBSF

Product Code	Description	Weight	
		LB	KG
CMPIBTCF	I-Beam Tube Clamp Forged	3.5	1.6
CMPIBSF	Swivel I-Beam Clamp Forged	4.0	1.8

CP5

T-Bolt Clamp

CMPTS

CMPTRA

Product Code	Description	Weight	
		LB	KG
CMPTRA	T Bolt Right Angle Clamp	3.12	1.41
CMPTS	T Bolt Swivel Clamp	2.8	1.3
CMPTR2X238	T Bolt Right Angle Clamp 1.9″to 2.375″	3.2	1.46
CMPTS2X238	T Bolt Swivel Clamp 1.9″ to 2.375″	3.4	1.55

CP6 Transom Clamp & Spigot

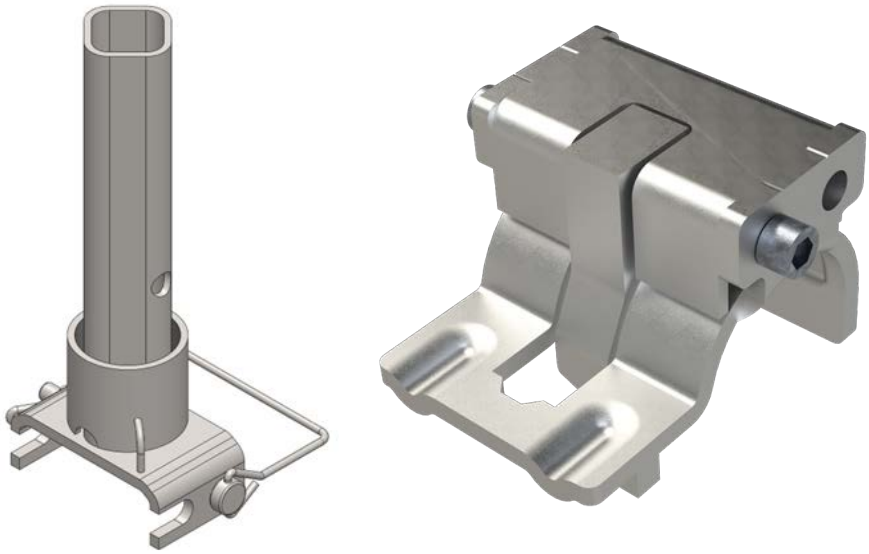

Product Code	Description	Width		Length		Height		Depth		Weight	
		IN	MM	IN	MM	IN	MM	IN	MM	LB	KG
26CMPRLTSS	Single Sided Ring Lock Transom Clamp	3.39	86.1	3.65	92.7	3.55	90.2	-	-	1.35	0.61
26CMPRLTDS	Double Sided Ring Lock Transom Clamp	3.39	86.1	4.78	121.4	3.55	90.2	-	-	1.37	0.71
26CMPRLTSA	Ring Lock Transom Clamp Spigot Adapter	4.19	106.3	3.68	93.6	8.71	221.3	1.38	35.0	1.78	0.90

CP7

Ring System Accessory Clamps

CMP-RMPWCS

CMP-RMPEBR

CMP-RMPEBS

CMP-RTWC

CMP-RCLB

CMP-RCLW

Product Code	Description	Weight	
		LB	KG
CMPRMPEBR	Ring Mouth Piece w/Rigid Eye-Bolt Clamp	3.23	1.5
CMPRMPEBS	Ring Mouth Piece w/Swivel Eye-Bolt Clamp	2.9	1.3
CMPRMPWCS	Ring Mouth Piece w/Swivel Wedge Clamp	3.5	1.6
CMPRTWC	Twin Wedge Coupler Ring Lock	2.6	1.2
CMPRCLB	Clamp on Rosette Bolt Style	2.6	1.2
CMPRCLW	Clamp on Rosette Wedge Style	1.8	0.8

CP8

Tube Couplers

CMPSEP

CMPSPL

Product Code	Description	Weight	
		LB	KG
CMPSEP	System Expansion Pin (Forged)	2.6	1.2
CMPSPL	Single Putlog Coupler	1.4	0.7

06

Ladders

LD1 17" Wide Ladder & Bracket

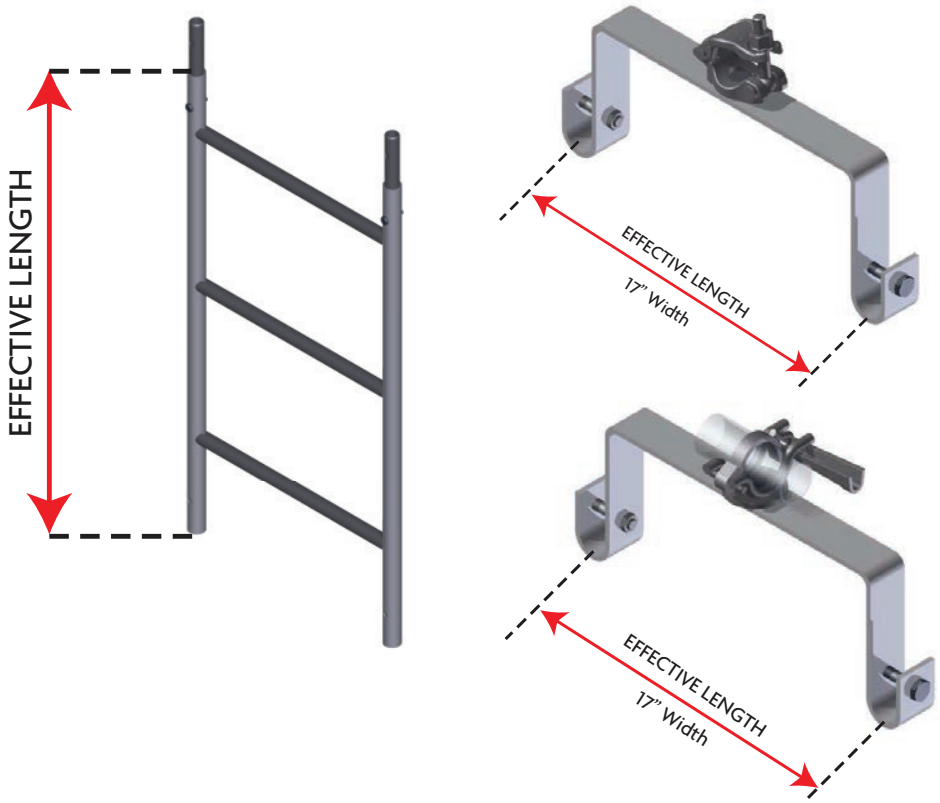

Product Code	Description	Height		Weight	
		IN	MM	LB	KG
LD17W3	3'-17" Wide Ladder	3.00	1.22	10.6	4.8
LD17W5	5'-17" Wide Ladder	5.00	1.83	17.2	7.80
LD17W6	6'-17" Wide Ladder	6.00	2.44	20.1	9.10
LDB17W	17" Wide Ladder Bracket - 7.25" Deep	N/A	N/A	8.0	3.60
LDB17WW	17" Wide Ladder Bracket Wedge Style - 7.25" Deep	N/A	N/A	7.7	3.50
07LDB17W6	17" Ladder Bracket - 6" Deep	N/A	N/A	6.6	3.00

LD2 17” Wide Non-Slip Ladder & Bracket

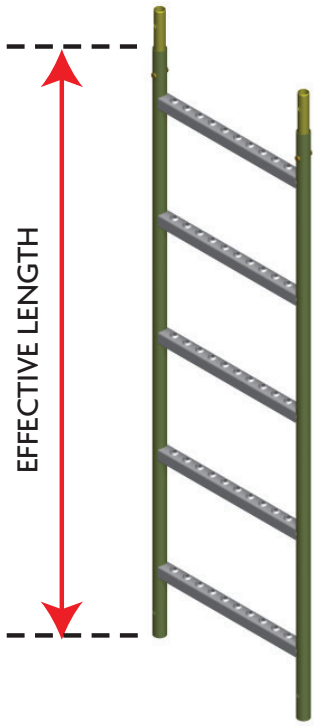

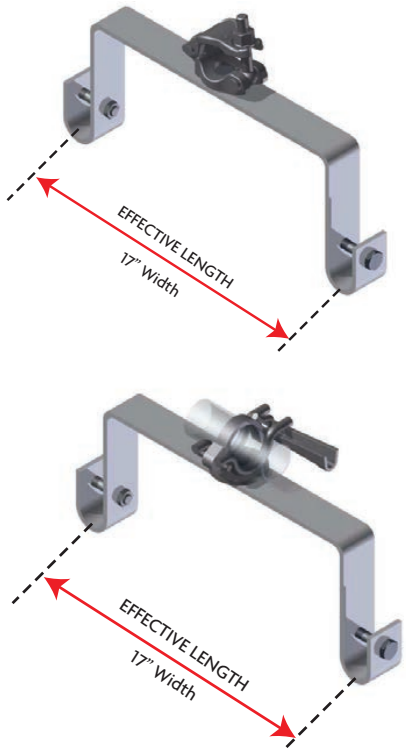

Product Code	Description	Height		Weight	
		IN	MM	LB	KG
LD17WNS3	3’-17” Wide Non-slip Ladder	48	1.22	9.6	4.3
LD17WNS5	5’-17” Wide Non-slip Ladder	72	1.83	13.2	6.0
LD17WNS6	6’-17” Wide Non-slip Ladder	96	2.44	17.1	7.7
LDB17W	17” Wide Ladder Bracket - 7.25” Deep	120	3.05	20.0	9.1
LDB17WW	17” Wide Ladder Bracket Wedge Style - 7.25” Deep	156	3.96	26.5	12.0
07LDB17W6	17” Ladder Bracket - 6” Deep	192	4.88	33.9	15.4

LD3 Heavy Duty Steel Ladder & Bracket

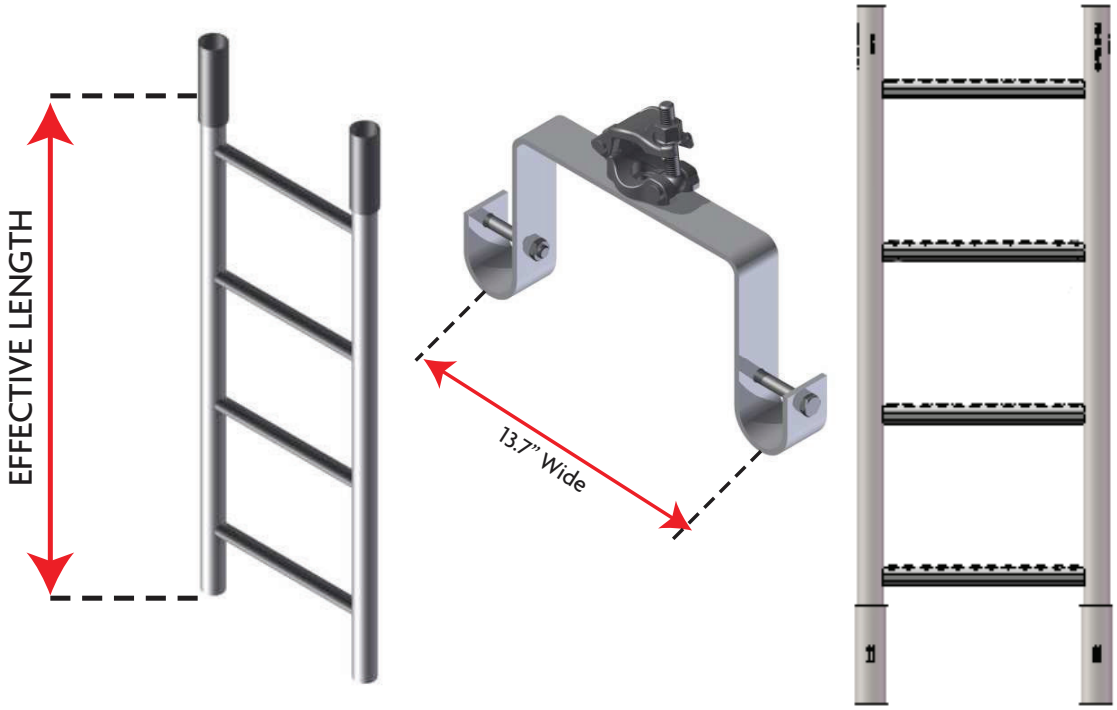

Product Code	Description	Height		Weight	
		IN	MM	LB	KG
LDCSLW3NS	3' Steel Ladder - 13.7" Wide	39.37	1.00	18.1	8.20
LDCSLW5NS	5' Steel Ladder - 13.7" Wide	59.06	1.50	25.4	11.50
LDCSLW10NS	10' Steel Ladder - 13.7" Wide	118.11	3.00	46.3	21.00
LDCLBW	Ladder Bracket - 7.74" Deep			6.8	3.10

LD4 Ladder-Ring Type

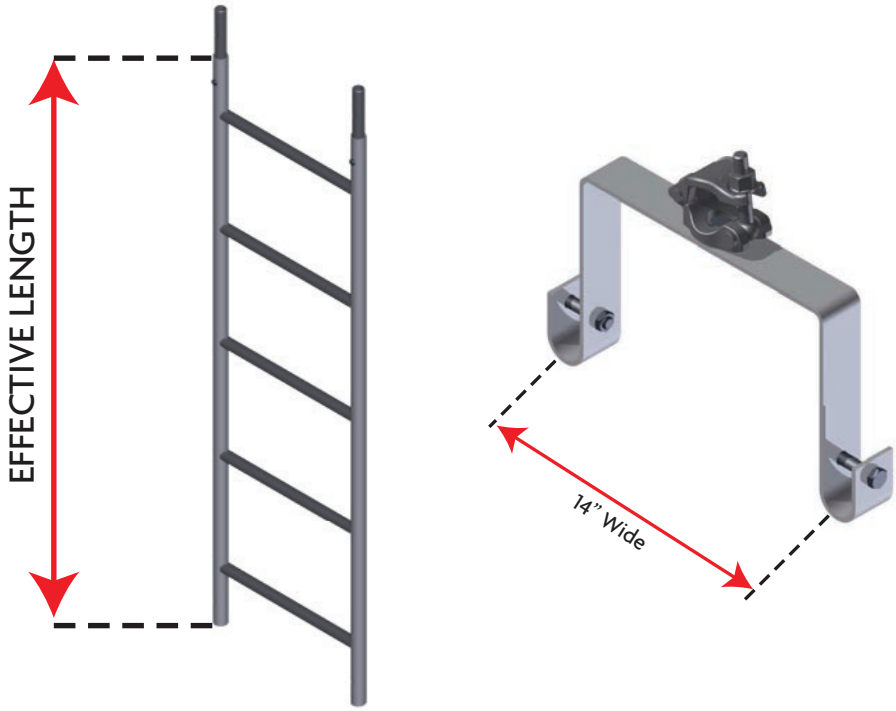

Product Code	Description	Height		Weight	
		IN	MM	LB	KG
LDRL3	3′ Ladder-Ring Type - 14″ Wide	3.00	0.914	5.37	2.40
LDRL5	5′ Ladder-Ring Type - 14″ Wide	5.00	1.254	8.58	3.90
LDRL10	10′ Ladder-Ring Type - 14″ Wide	10.00	3.050	16.59	7.50
LDRRLBW	Ladder Bracket Ring Type - 9″ Deep	N/A	N/A	6.90	3.17

LD5 SAU Channel Style Ladder

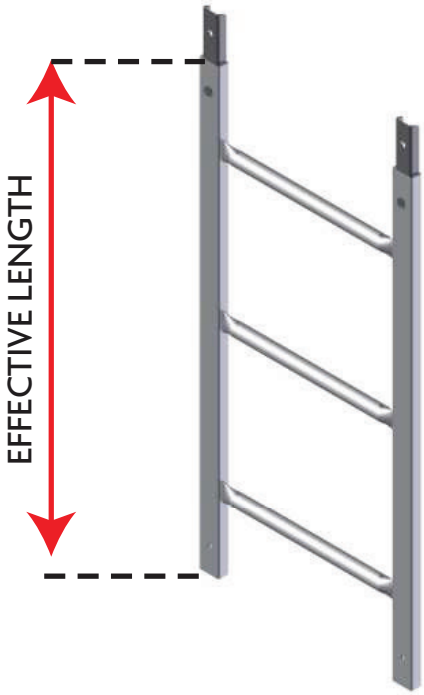

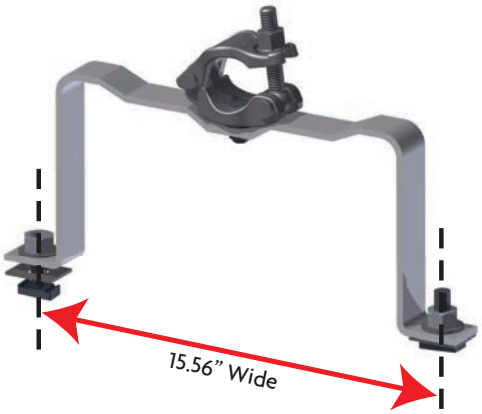

LDRSAUBG

Product Code	Description	Height		Weight	
		IN	MM	LB	KG
LDRSAU3G	SAU Style 3' Ladder	3.00	0.914	10.6	4.80
LDRSAU6G	SAU Style 6' Ladder	6.00	1.829	19.4	8.80
LDRSAUBG	SAU Style Ladder Bracket	N/A	N/A	6.4	2.90

LD6

Cage Rings

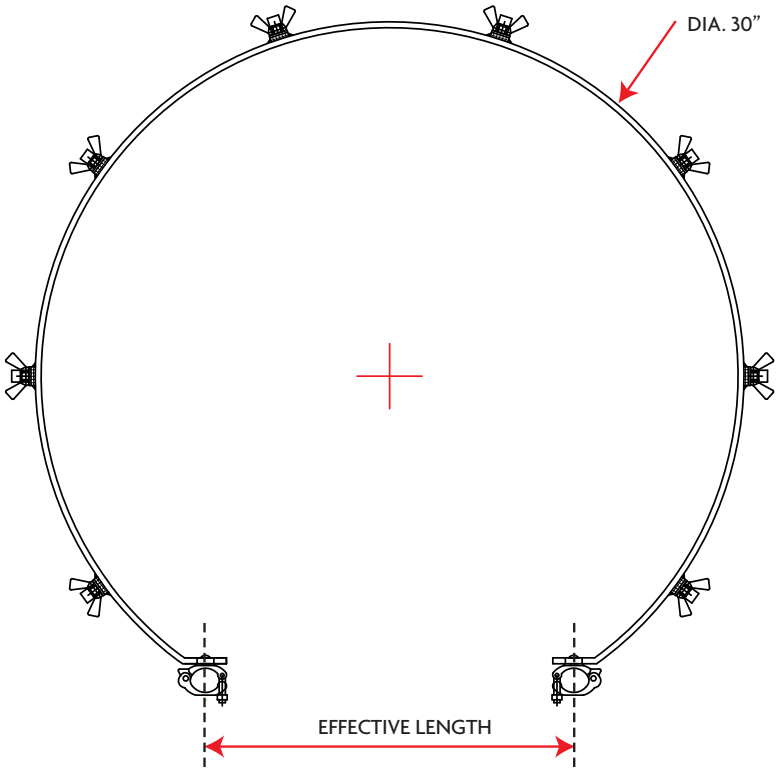

LDCLRC

LDCLR17

LDCLRS

Product Code	Description	Weight	
		LB	KG
LDCLR75C	3/4 Ladder Cage Ring w/1/2 Clamp	12.3	5.6
LDCLRC	Ladder Cage Ring w/1/2 Clamp (CAGD)	14.7	6.7

07

Boiler System

BS1

Throat Header

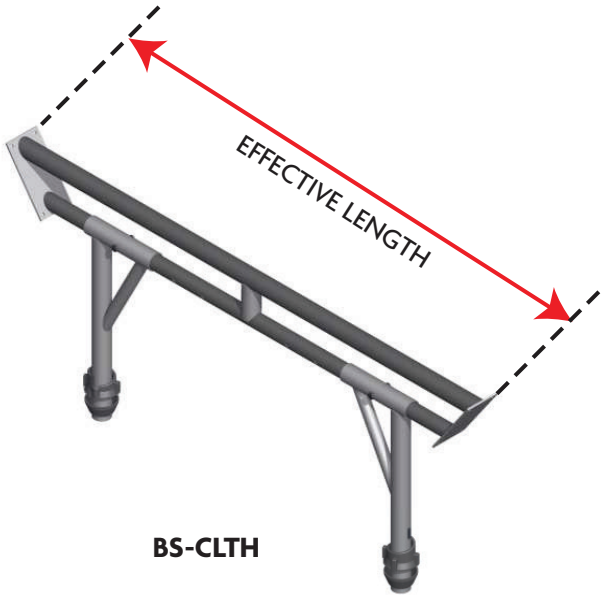

BS-CLTH

BS-TCTH

Product Code	Description	Effective Length		Weight	
		IN	MM	LB	KG
BSCLTH	Cup Lock Throat Header	60.63	1.540	40.1	18.20
BSRLTH	Ring Lock Throat Header	60.63	1.540	38.6	17.50

BS2

Frames & Frame Starter

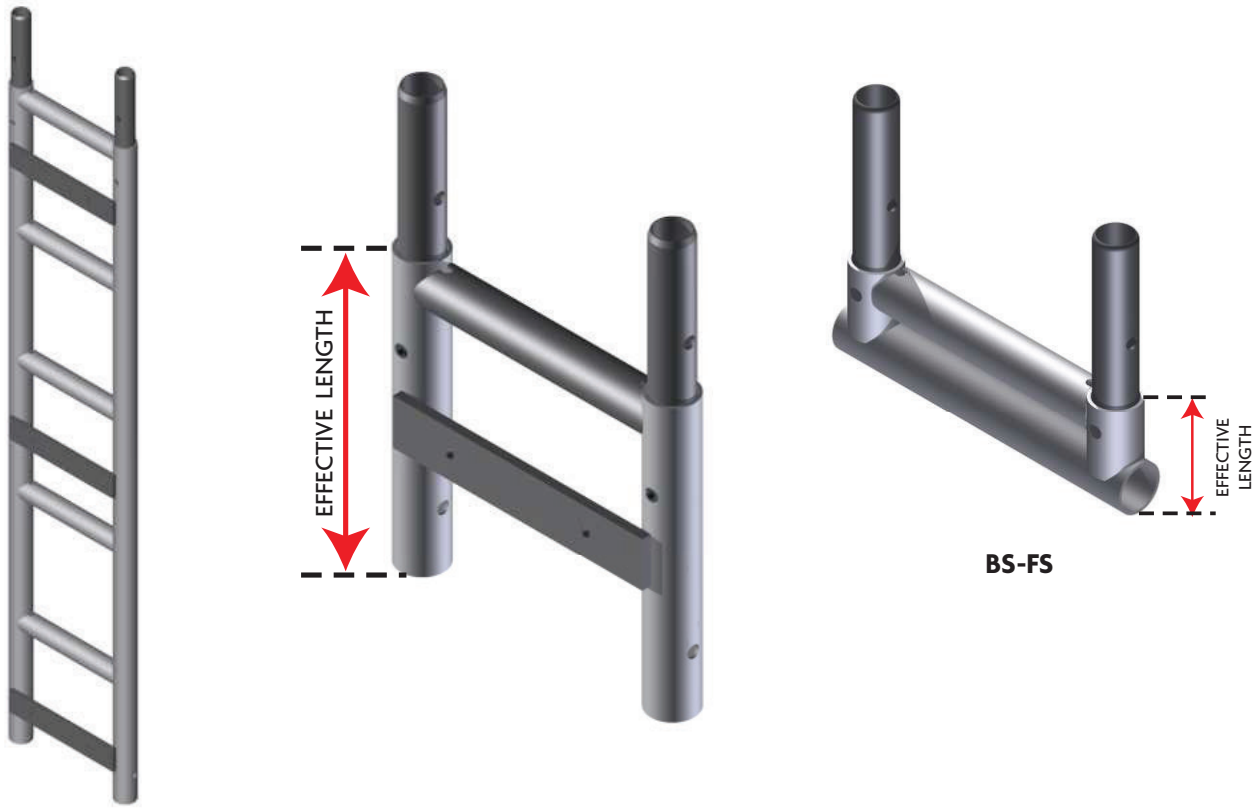

Product Code	Description	Effective Length		Weight	
		IN	MM	LB	KG
BSF1	12″ Frame	12	0.31	13.4	6.1
BSF3	36″ Frame	36	0.91	29.1	13.2
BSF5	60″ Frame	60	1.52	44.5	20.2
BSF6	72″ Frame	72	1.83	48.5	22.0
BSFS	Frame Starter	N/A	N/A	7.5	3.4

BS3 Base Beam

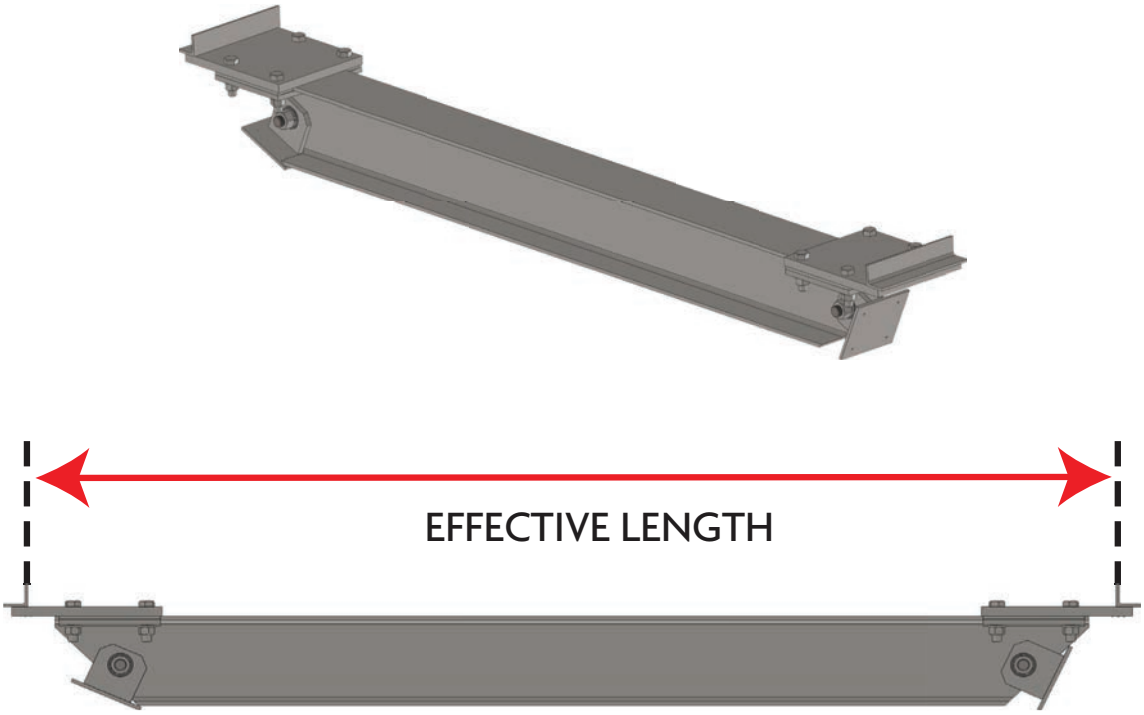

Product Code	Description	Effective Length		Weight	
		IN	MM	LB	KG
BSIB4	4′ Base Beam	54.10	1.37	105.8	48.0
BSIB6	6′ Base Beam	79.12	2.01	138.4	62.8
BSIB10	10′ Base Beam	123.44	3.14	224.9	102.0

BS4 Saddle Brace

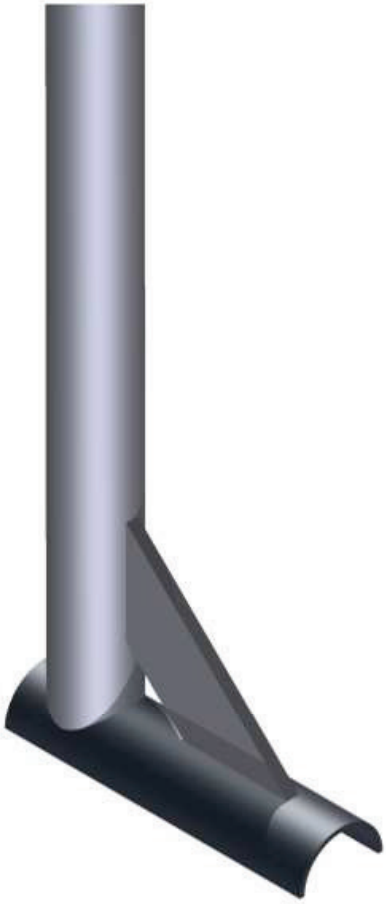

Product Code	Description	Effective Length		Weight	
		IN	MM	LB	KG
BSSB10	10′ Saddle Brace	120	3.05	28.7	13.0

BS5

Vee Chair

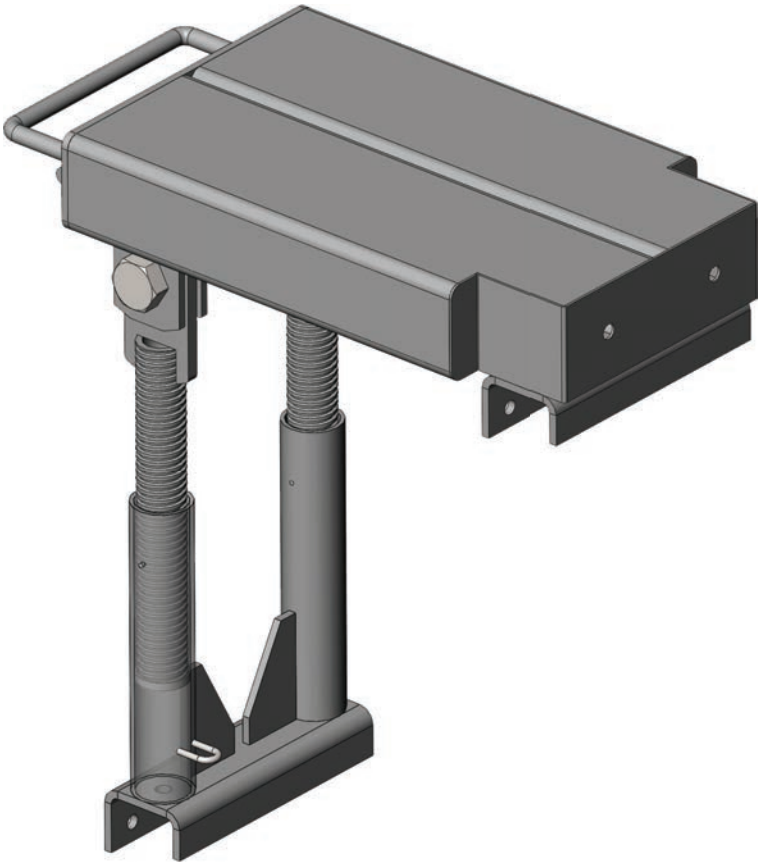

Product Code	Description	Weight	
		LB	KG
BSAVC	Adjustable Vee Chair	6.88	3.12

08

Walkboard

WB1 9" Steel Plank Raised Hook

TOP VIEW

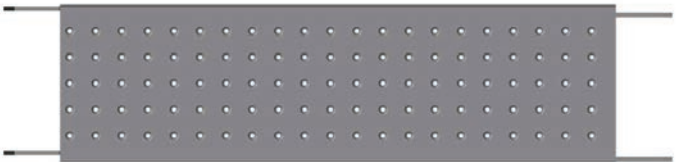

FRONT VIEW

Product Code	Description	Bay Length		Weight	
		IN	MM	LB	KG
WBSSP27	2'-7" Steel Plank	31	0.79	13.50	6.1
WBSSP211	2'-11" Steel Plank	35	0.9	14.5	6.6
WBSSP3	3' Steel Plank	36	0.91	15.7	7.1
WBSSP36	3'-6" Steel Plank	42	1.07	17.1	7.7
WBSSP4	4' Steel Plank	48	1.22	19	8.6
WBSSP41	4'-1" Steel Plank	49	1.25	19.1	8.7
WBSSP411	4'-11" Steel Plank	59	1.5	22.2	10.1
WBSSP5	5' Steel Plank	60	1.52	23.2	10.5
WBSSP511	5'-11" Steel Plank	71	1.8	24.9	11.3
WBSSP6	6' Steel Plank	72	1.83	26.5	12
WBSSP7	7' Steel Plank	84	2.13	31.2	14.2
WBSSP8	8' Steel Plank	96	2.44	35.4	16.1
WBSSP82	8'-2" Steel Plank	98	2.5	37.1	16.9
WBSSP9	9' Steel Plank	108	2.74	39.8	18.1
WBSSP10	10' Steel Plank	120	3.05	42.9	19.5

WB2 9” Steel Plank Raised Hook Cont.

TOP VIEW

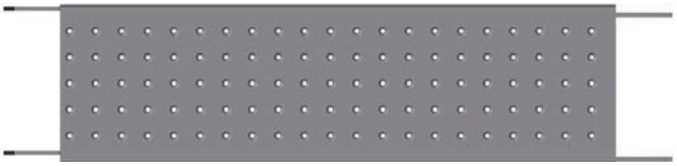

FRONT VIEW

Product Code	Description	Bay Length		Weight	
		IN	MM	LB	KG
WBSSP3	3′ Steel Plank	36	0.91	15.7	7.1
WBSSP36	3′-6″ Steel Plank	42	1.07	17.1	7.7
WBSSP4	4′ Steel Plank	48	1.22	19	8.6
WBSSP5	5′ Steel Plank	60	1.52	23.2	10.5
WBSSP6	6′ Steel Plank	72	1.83	26.5	12
WBSSP7	7′ Steel Plank	84	2.13	31.2	14.2
WBSSP8	8′ Steel Plank	96	2.44	35.4	16.1
WBSSP9	9′ Steel Plank	108	2.74	39.8	18.1
WBSSP10	10′ Steel Plank	120	3.05	42.9	19.5

WB3 9" Low Profile Steel Plank

TOP VIEW

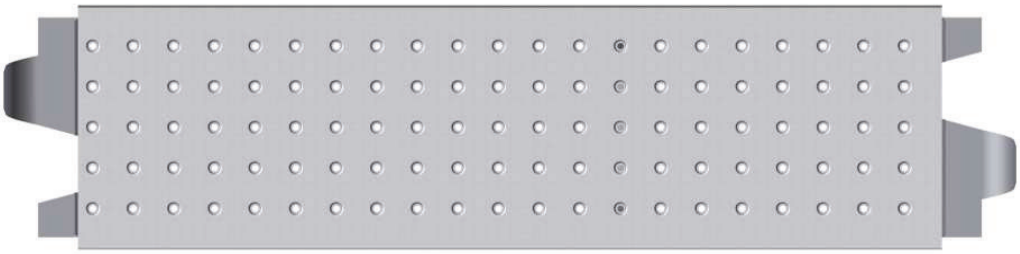

FRONT VIEW

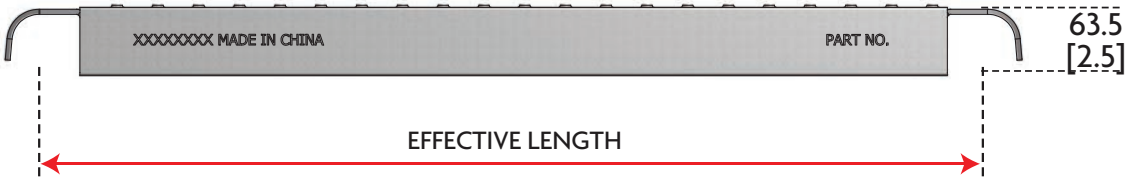

Product Code	Description	Bay Length		Weight	
		IN	MM	LB	KG
WBDEP110	1'-10" Low Profile Steel Plank	22.03	0.560	10.7	4.9
WBDEP27	2'-7" Low Profile Steel Plank	32.03	0.788	13.6	6.2
WBDEP3	3' Low Profile Steel Plank	36.00	0.914	15.7	7.1
WBDEP36S	3'-6" Low Profile Steel Plank	42.00	1.067	17.2	7.8
WBDEP36RL	3'-6.8" Low Profile Steel Plank	42.83	1.088	17.2	7.8
WBDEP39	3'-9" Low Profile Steel Plank	45.28	1.150	18.5	8.4
WBDEP4	4' Low Profile Steel Plank	48.03	1.220	19.4	8.8
WBDEP43RL	4'-3" Low Profile Steel Plank Ring Lock	50.36	1.286	19.3	8.8
WBDEP43CL	4'-3" Low Profile Steel Plank Cup Lock	51.88	1.300	20.8	9.5
WBDEP410	4'-10" Low Profile Steel Plank	58.43	1.484	21.6	9.8
WBDEP5	5' Low Profile Steel Plank	60.00	1.524	23.4	10.6
WBDEP52	5'-2" Low Profile Steel Plank	61.89	1.572	22.0	10.0

WB4 9" Low Profile Steel Plank Cont.

TOP VIEW

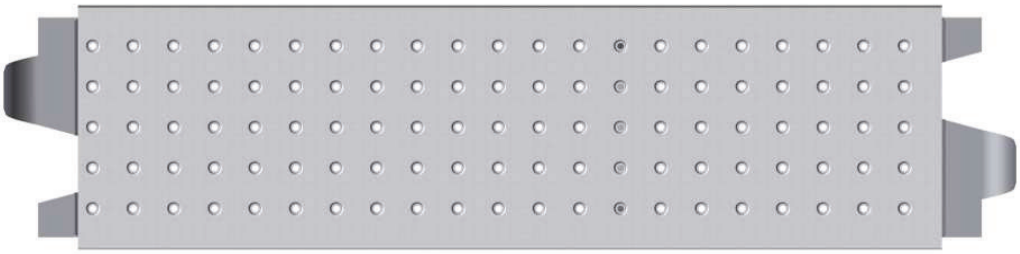

FRONT VIEW

Product Code	Description	Bay Length		Weight	
		IN	MM	LB	KG
WBDEP511	5′-11″ Low Profile Steel Plank	70.87	1.800	27.3	12.4
WBDEP6	6′ Low Profile Steel Plank	72.00	1.829	27.5	12.5
WBDEP69	6′-9″ Low Profile Steel Plank	81.57	2.072	29.3	13.3
WBDEP7	7′ Low Profile Steel Plank	84.00	2.134	31.4	14.3
WBDEP8	8′ Low Profile Steel Plank	96.06	2.440	36.5	16.6
WBDEP82	8′-2″ Low Profile Steel Plank	98.42	2.500	37.0	16.8
WBDEP86	8′-6″ Low Profile Steel Plank	101.26	2.572	38.1	17.3
WBDEP9	9′ Low Profile Steel Plank	108.00	2.743	40.1	18.2
WBDEP100	10′ Low Profile Steel Plank	120.12	3.051	44.1	20

WB5 9-1/2" Low Profile Steel Plank

TOP VIEW

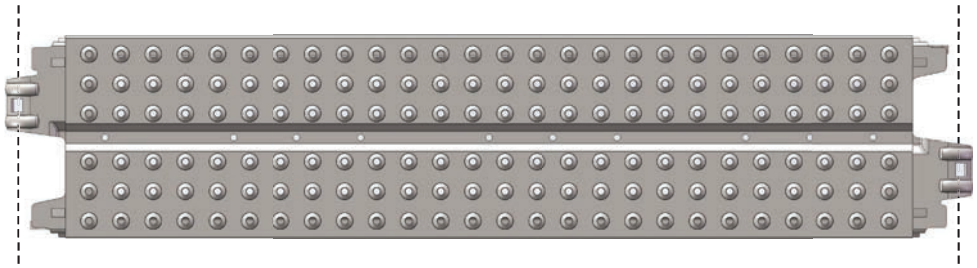

FRONT VIEW

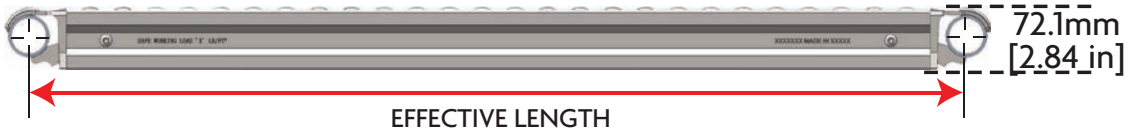

Product Code	Description	Bay Length		Weight	
		IN	MM	LB	KG
WBCS20	2′ Low Profile Steel Plank	24.02	0.610	11.2	5.1
WBCS25	2′-5″ Low Profile Steel Plank	29.13	0.740	12.5	5.7
WBCS26	2′-6″ Low Profile Steel Plank	29.53	0.750	12.9	5.9
WBCS36	3′-6″ Low Profile Steel Plank	42.83	1.088	17.4	7.9
WBCS50	5′ Low Profile Steel Plank	60.00	1.524	21.9	9.9
WBCS60	6′ Low Profile Steel Plank	72.01	1.829	26.1	11.8
WBCS80	8′ Low Profile Steel Plank	96.06	2.440	33.7	15.3
WBCS100	10′ Low Profile Steel Plank	102.12	3.051	41.4	18.8

Note: Custom sizes available, minimum order may be required.

WB6 9-1/2" Low Profile Steel Plank - Canadian Sizes

TOP VIEW

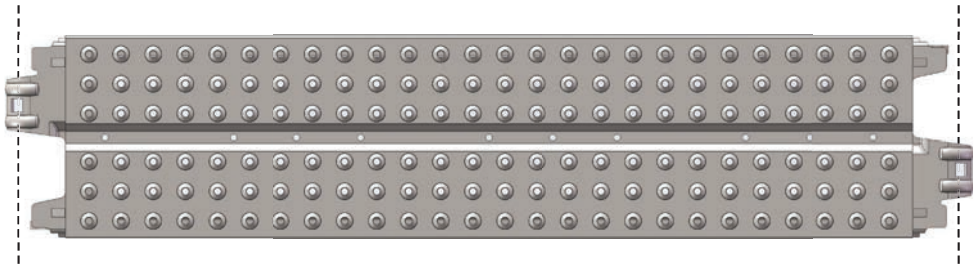

FRONT VIEW

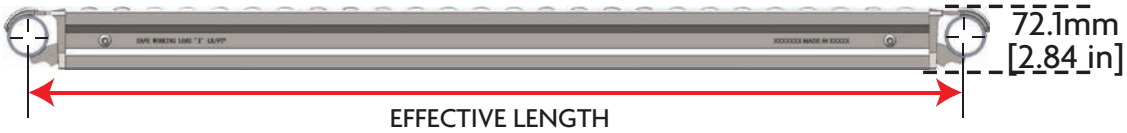

Product Code	Description	Bay Length		Weight	
		IN	MM	LB	KG
WBCS22	2′-2″ Low Profile Steel Plank	25.59	0.650	10.8	4.9
WBCS36S	3′-6″ Low Profile Steel Plank	41.93	1.065	17.0	7.7
WBCS39	3′-9″ Low Profile Steel Plank	45.28	1.150	16.6	7.6
WBCS52	5′-2″ Low Profile Steel Plank	61.89	1.572	21.6	9.8
WBCS70	7′ Low Profile Steel Plank	83.86	2.130	29.3	13.3

Note: Custom sizes available, minimum order may be required.

87 12-1/2" Steel Plank

TOP VIEW

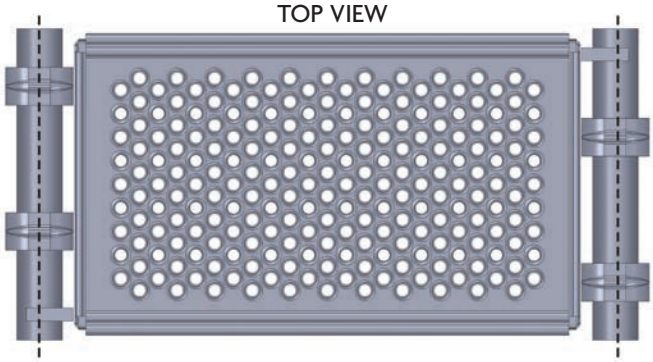

FRONT VIEW

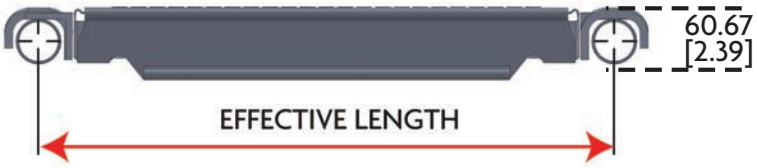

Product Code	Description	Effective Length		Weight	
		IN	MM	LB	KG
WBSWP2	2′ Plank w/Hooks	24.02	0.610	14.3	6.5
WBSWP24	2′-4″ Plank w/Hooks	28.82	0.732	16.6	7.5
WBSWP211	2′-11″ Plank w/Hooks	34.65	0.880	18.8	8.5
WBSWP3	3′ Plank w/Hooks	35.98	0.914	21.4	9.7
WBSWP33	3′-3″ Plank w/Hooks	38.98	0.990	21.4	9.7
WBSWP36	3′-6″ Plank w/Hooks	42.83	1.088	23.3	10.6
WBSWP4	4′ Plank w/Hooks	48.03	1.220	27.3	12.4
WBSWP43	4′-3″ Plank w/Hooks	50.63	1.286	27.3	12.4
WBSWP47	4′-7″ Plank w/Hooks	55.12	1.400	28.2	12.8
WBSWP410	4′-10″ Plank w/Hooks	58.43	1.484	29.1	13.2
WBSWP411	4′-11″ Plank w/Hooks	59.05	1.500	29.1	13.2
WBSWP5	5′ Plank w/Hooks	60.00	1.524	29.3	13.3
WBSWP6	6′ Plank w/Hooks	72.00	1.829	37.5	17.0
WBSWP69	6′-9″ Plank w/Hooks	81.57	2.072	40.0	18.2
WBSWP8	8′ Plank w/Hooks	96.06	2.440	48.2	21.9
WBSWP86	8′-6″ Plank w/Hooks	101.26	2.572	49.0	22.2
WBSWP9	9′ Plank w/Hooks	107.99	2.743	53.0	24.1
WBSWP910	9′-10″ Plank w/Hooks	118.11	3.000	55.8	25.3
WBSWP101	10′-1″ Plank w/Hooks	120.87	3.070	60.8	27.6

88 12-1/2" Steel Plank

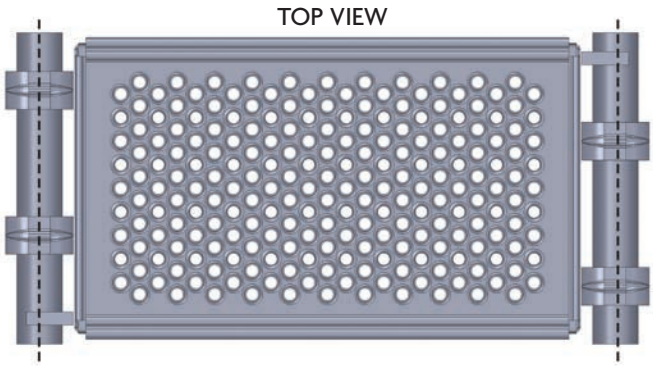

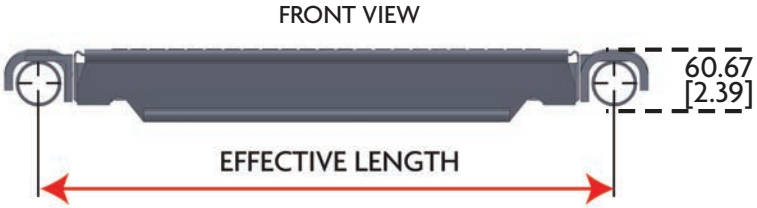

***Canadian sizes**

Product Code	Description	Effective Length		Weight	
		IN	MM	LB	KG
WBSWP22	2'-2" Plank w/Hooks	25.59	0.650	15.9	7.2
WBSWP36S	3'-6" Plank w/Hooks	41.93	1.065	22.9	10.4
WBSWP39	3'-9" Plank w/Hooks	45.28	1.150	25.6	11.6
WBSWP52	5'-2" Plank w/Hooks	61.89	1.572	31.2	14.2
WBSWP7	7' Plank w/Hooks	83.86	2.130	41.3	18.7
WBSWP100	10' Plank w/Hooks	120.12	3.051	57.7	26.2

WB7 7-9/16" Filler Steel Plank

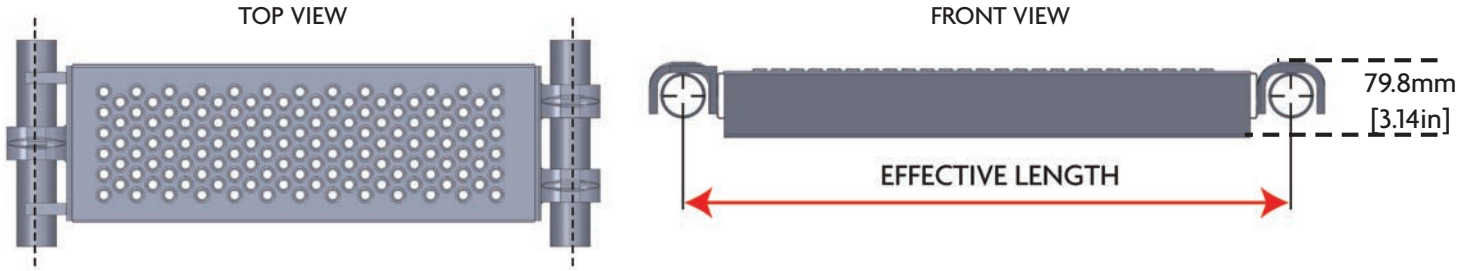

Product Code	Description	Effective Length		Weight	
		IN	MM	LB	KG
WBSWPF20	2′ Filler Plank w/Hooks	24.02	0.610	15.5	7.0
WBSWPF24	2′-4″ Filler Plank w/Hooks	28.82	0.732	17.0	7.7
WBSPF211	2′-11″ Filler Plank w/Hooks	34.65	0.880	18.9	8.6
WBSPF30	3′ Filler Plank w/Hooks	35.98	0.914	19.4	8.8
WBSPF33	3′-3″ Filler Plank w/Hooks	38.98	0.990	20.3	9.2
WBSWPF36	3′-6″ Filler Plank w/Hooks	42.83	1.088	21.6	9.8
WBSWPF40	4′ Filler Plank w/Hooks	48.03	1.220	23.3	10.6
WBSWPF43	4′-3″ Filler Plank w/Hooks	50.63	1.286	23.4	10.6
WBSWPF410	4′-10″ Filler Plank w/Hooks	58.43	1.484	26.6	12.1
WBSWPF50	5′ Filler Plank w/Hooks	60.00	1.524	27.1	12.3
WBSWPF60	6′ Filler Plank w/Hooks	72.00	1.829	32.0	14.5
WBSWPF69	6′-9″ Filler Plank w/Hooks	81.57	2.072	34.8	15.8
WBSWPF70	7′ Filler Plank w/Hooks	83.86	2.130	36.8	16.7
WBSWPF86	8′-6″ Filler Plank w/Hooks	101.26	2.572	39.2	17.8
WBSWPF90	9′ Filler Plank w/Hooks	107.99	2.743	41.7	18.9
WBSWPF101	10′-1″ Filler Plank w/Hooks	120.87	3.070	44.8	20.3

WB8 7-9/16" Filler Steel Plank

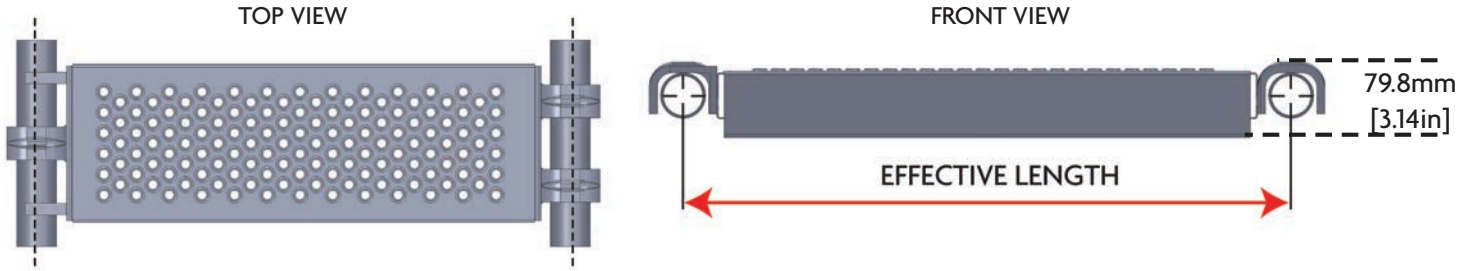

***Canadian sizes**

Product Code	Description	Effective Length		Weight	
		IN	MM	LB	KG
WBSWPF22	2′-2″ Filler Plank w/Hooks	25.59	0.650	16.0	7.3
WBSWPF36S	3′-6″ Filler Plank w/Hooks	41.93	1.065	21.4	9.7
WBSWPF39	3′-9″ Filler Plank w/Hooks	45.28	1.150	16.8	7.6
WBSWPF40	4′-0″ Filler Plank w/Hooks	48.03	1.220	23.3	10.6
WBSWPF43	4′-3″ Filler Plank w/Hooks	50.63	1.286	23.4	10.6
WBSWPF410	4′-10″ Filler Plank w/Hooks	58.43	1.484	26.6	12.1
WBSWPF50	5′-0″ Filler Plank w/Hooks	60.00	1.524	27.1	12.3
WBSWPF52	5′-2″ Filler Plank w/Hooks	61.89	1.572	27.6	12.5
WBSWPF100	10′ Filler Plank w/Hooks	120.12	3.051	44.1	20.0

WB9 9.5" All Aluminum Walkboard

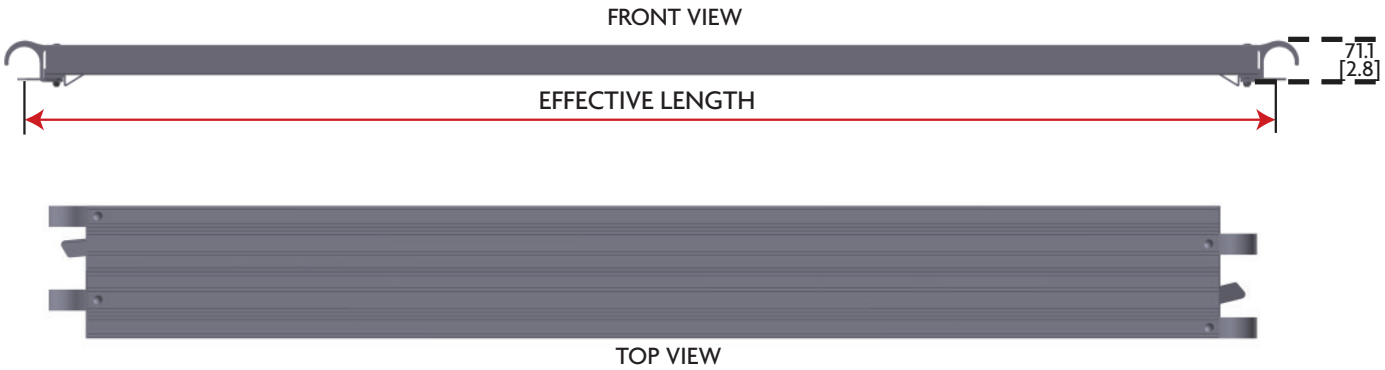

Product Code	Description	Bay Length		Weight	
		IN	MM	LB	KG
WBAA953	9.5"X3' All Alumn Walk Board	36.00	0.914	7.7	3.5
WBAA9536S	9.5"X3'-6" All Alumn Walk Board	41.97	1.066	7.9	3.6
WBAA9539	9.5"X3'-9" All Alumn Walk Board	45.28	1.150	9.0	4.1
WBAA954	9.5"x4' All Alumn Walk Board	48.00	1.220	9.3	4.2
WBAA955	9.5"x5' All Alumn Walk Board	60.00	1.524	11.0	5.0
WBAA9552	9.5"x5'-2" All Alumn Walk Board	61.89	1.572	11.4	5.2
WBAA9555	9.5"x5'-5" All Alumn Walk Board	65.00	1.651	11.8	5.4
WBAA956	9.5"x6' All Alumn Walk Board	72.00	1.829	12.8	5.8
WBAA957	9.5"x7' All Alumn Walk Board	84.00	2.134	14.6	6.6
WBAA958	9.5"x8' All Alumn Walk Board	96.00	2.438	16.2	7.3
WBAA9586	9.5"x8'-6" All Alumn Walk Board	101.26	2.572	17.2	7.8
WBAA9510	9.5"x10' All Alumn Walk Board	120.00	3.048	19.4	8.8

WB10 19” Aluminum Plank

TOP VIEW

FRONT VIEW

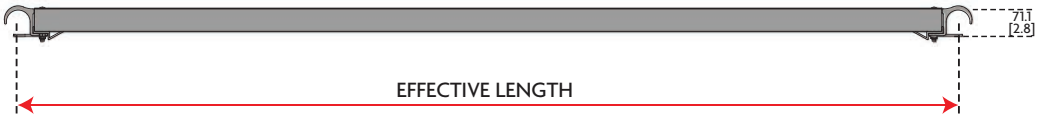

Product Code	Description	Bay Length		Weight	
		IN	MM	LB	KG
WBAA192	19″ x 2′ All Alumn Walk Board	24.00	0.610	11.6	5.3
WBAA1922	19″ x 2′2″ All Alumn Walk Board	25.59	0.650	12.5	5.7
WBAA19211	19″x 2′-11″ All Alumn Walk Board	34.65	0.880	14.1	6.4
WBAA193	19″ x 3′ All Alumn Walk Board	36.00	0.914	14.6	6.6
WBAA1936S	19″ x 3′-6″ All Alumn Walk Board	41.97	1.066	17.3	7.9
WBAA1939	19″ x 3′-9″ All Alumn Walk Board	45.28	1.150	17.6	8.0
WBAA194	19″x4′ All Alumn Walk Board	48.00	1.220	17.9	8.1
WBAA195	19″x5′ All Alumn Walk Board	60.00	1.524	21.0	9.5
WBAA1952	19″x5′-2″ All Aluminum Walk Board	61.89	1.572	22.1	10.0
WBAA1955	19″x5′-5″ All Aluminum Walk Board	65.00	1.651	22.5	10.2
WBAA196	19″ x 6′ All Aluminum Walk Board	72.00	1.829	24.9	11.3
WBAA197	19″ x 7′ All Aluminum Walk Board	84.00	2.134	28.1	12.7
WBAA198	19″ x 8′ All Aluminum Walk Board	96.00	2.438	31.5	14.3
WBAA1986	19″x8′-6″ All Aluminum Walk Board	101.26	2.572	33.1	15.0
WBAA199	19″x9′ All Aluminum Walk Board	108.00	2.743	35.3	16.0
WBAA1910	19′x10′ All Aluminum Walk Board	120.00	3.048	39.3	17.8

WB11 19” Aluminum Plywood Board

TOP VIEW

FRONT VIEW

H Hook

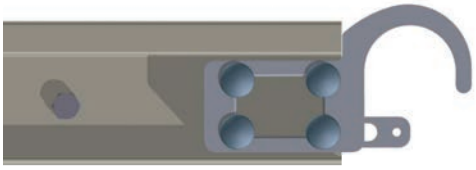

Product Code	Description	Effective Length		Weight	
		IN	MM	LB	KG
WBAP1939H1	19″x3′-9″ Aluminum Plywood Board	45	1.14	19.3	8.8
WBAP1952H1	19″x5′-2″ Aluminum Plywood Board	62	1.57	25.4	11.5
WBAP197H1	19″x7′ Aluminum Plywood Board	84	2.13	33.5	15.2
WBAP198H1	19″x8′ Aluminum Plywood Board	96	2.44	37.6	17.1
WBAP1910H1	19″x10′ Aluminum Plywood Board	120	3.05	43.7	19.8

WB13 Catwalk Grating

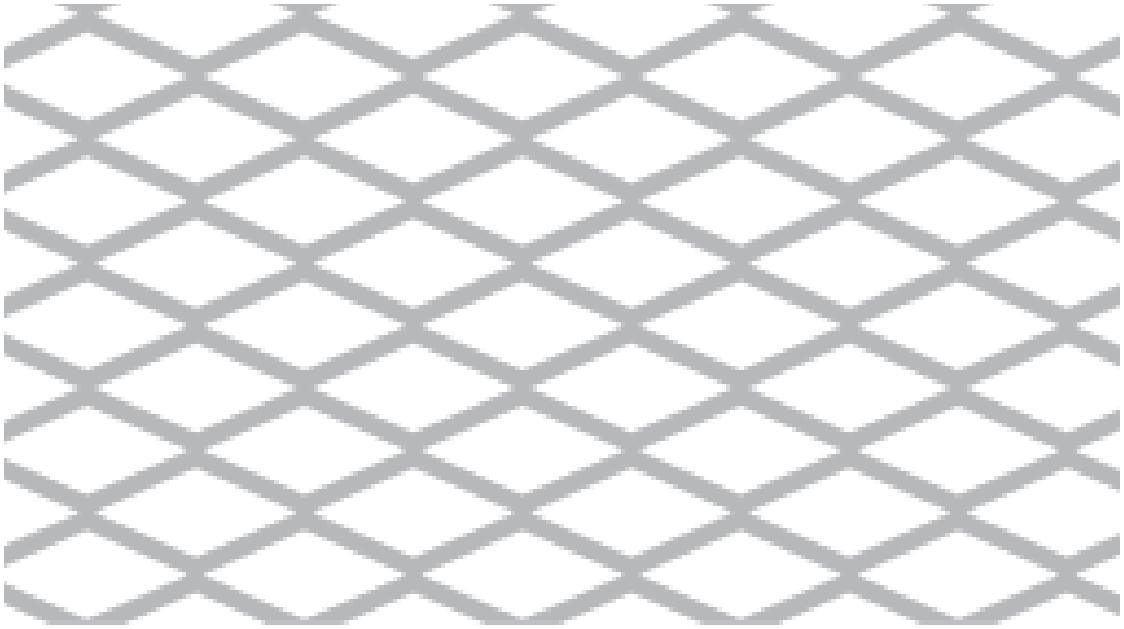

Product Code	Description	Width		Length		Weight	
		IN	MM	LB	KG	LB	KG
EMG31224	1'x2' Catwalk Grating	12	0.3	24	0.61	5.3	2.4
EMG32424	2'x2' Catwalk Grating	24	0.61	24	0.61	10.6	4.8
EMG31248	1'x4' Catwalk Grating	12	0.3	48	1.22	106	4.8
EMG32448	2'x4' Catwalk Grating	24	0.61	48	1.22	212	9.6

Note: Not stocked

WB14

Stage Boards

Aluminum Plank - Two Man Unit 500 LB. Duty Railing

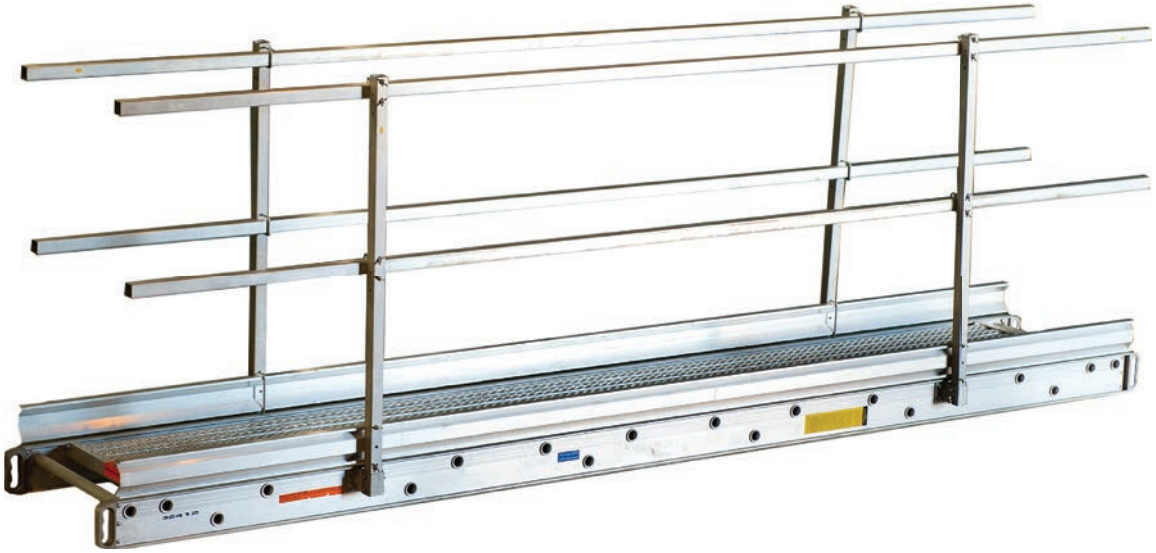

Length	Rail Depth	12" Wide		24" Wide		28" Wide	
FT	IN	PART #	WEIGHT	PART #	WEIGHT	PART #	WEIGHT
12	3.5	PB21212	36 lbs	PB22412	48 lbs	PB22812	53 lbs
16	4.5	PB21216	53 lbs	PB22416	72 lbs	PB22816	79 lbs
20	5.25	PB21220	77 lbs	PB22420	99 lbs	PB22820	110 lbs
24	5.25	PB21224	91 lbs	PB22424	114 lbs	PB22824	130 lbs
28	6	-	-	PB22428	155 lbs	PB22828	170 lbs
32	6	-	-	PB22432	177 lbs	PB22832	192 lbs
36	6.5	-	-	PB22436	241 lbs	PB22836	260 lbs
39	6.5	-	-	PB22440	268 lbs	PB22840	288 lbs

NOTE: Stage Boards do not come with guardrails.
Please contact the DSS office for guardrail package information.

WB15

Stage Boards

Aluminum Plank - Three Man Unit 750 LB. Duty Railing

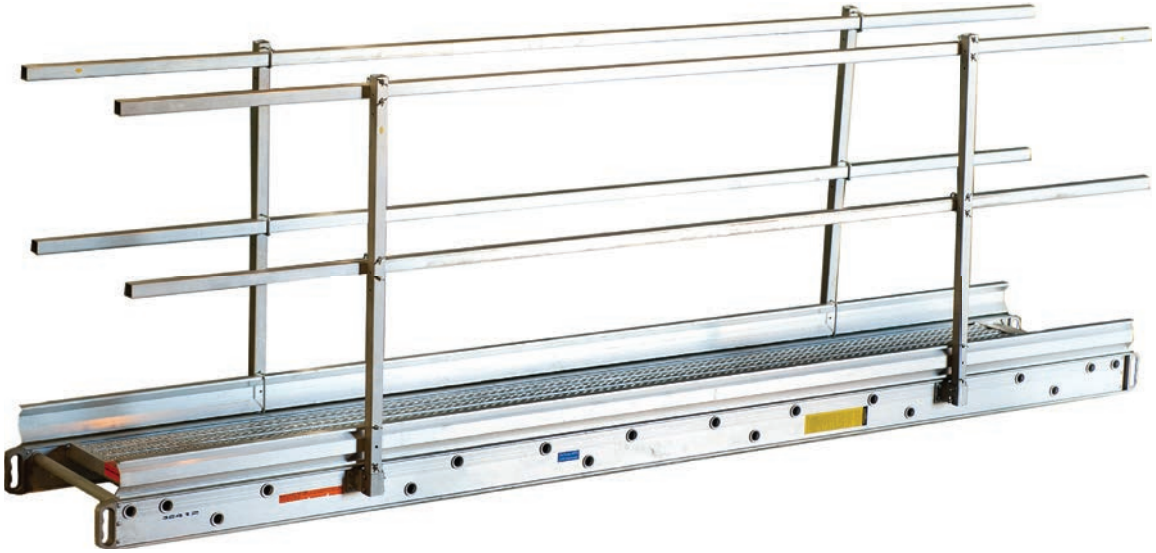

Length	Rail Depth	24" Wide		28" Wide	
FT	IN	PART #	WEIGHT	PART #	WEIGHT
12	5.30	PB32412	65 lbs	PB32812	74 lbs
16	5.30	PB32416	80 lbs	PB32816	90 lbs
20	6.04	PB32420	111 lbs	PB32820	121 lbs
24	6.04	PB32424	133 lbs	PB32824	145 lbs
28	6.54	PB32428	188 lbs	PB32828	200 lbs
32	6.54	PB32432	243 lbs	PB32832	262 lbs
36	7.00	PB32436	273 lbs	PB32836	294 lbs
39	7.00	PB32439	305 lbs	PB32839	357 lbs

NOTE: Stage Boards do not come with guardrails.
Please contact the DSS office for guardrail package information.

WB16 28" Hatch Plank with Aluminum Ladder

Product Code	Description	Effective Length		Weight	
		IN	MM	LB	KG
WBAPSH287TH-H2	28" x 7" Aluminum Plywood Hatch Plank w/ Aluminum Ladder	84	2.13	72.8	33
WBAPSH2810TH-H2	28" x 10" Aluminum Plywood Hatch Plank w/ Aluminum Ladder	120	3.05	90.8	41.2

Product Code	Description	Effective Length		Weight	
		IN	MM	LB	KG
WBAASH287TH-H2	28" x 7" All Aluminum Hatch Plank w/ Aluminum Ladder	84	2.13	82	37.2
WBAASH2810TH-H2	28" x 10" All Aluminum Hatch Plank w/ Aluminum Ladder	120	3.05	104.1	47.2

WB17 Wood Plank

Product Code	Description	Weight
		LB
WBWL0415E	4′ Laminated Scaffold Board	15.2
WBWL0615E	6′ Laminated Scaffold Board	22.8
WBWL0815E	8′ Laminated Scaffold Board	30.4
WBWL1015E	10′ Laminated Scaffold Board	38.0
WBWL1215E	12′ Laminated Scaffold Board	45.6
WBWL1615E	16′ Laminated Scaffold Board	60.8
WBW04	4′ DI-65 Solid Sawn Scaffold Board	16.0
WBW06	6′ DI-65 Solid Sawn Scaffold Board	24.0
WBW08	8′ DI-65 Solid Sawn Scaffold Board	32.0
WBW10	10′ DI-65 Solid Sawn Scaffold Board	40.0
WBW12	12′ DI-65 Solid Sawn Scaffold Board	48.0
WBW16	16′ DI-65 Solid Sawn Scaffold Board	64.4

6059 South Loop East ▪ Houston TX 77087 ▪ 713-673-7701 ▪ 800-720-6629 ▪ **dss.net**